CAD/CAM

Module-3

Dr. Ajit Kumar Pattanaik
Asst Professor
Department of Mechanical Engineering
Govt College of Engineering, Kalahandi

Syllabus

MODULE – III (14 HOURS)

CAM - Numerical Control and NC Part Programming: Numerical Control, Numerical Control elements, NC Coordinate system, NC motion control system, Manual and Computer Aided programming, the APT language, Miscellaneous Functions, M, Advanced part-programming methods. Problems with conventional NC, NC technology: CNC, DNC, Combined DNC/ CNC system, Adaptive control manufacturing systems, Computer Integrated Manufacturing system, Machine Tools and related equipment, Materials Handling system: AGV, Robots, Lean manufacturing.

CAM (Computer Aided Manufacturing)

- CAM is the term that means Computer Aided Manufacturing.
- It can be defined as the use of computer system to plan, manage and control the operations of a shop floor. In other words, the use of computer system in manufacturing process is called CAM.

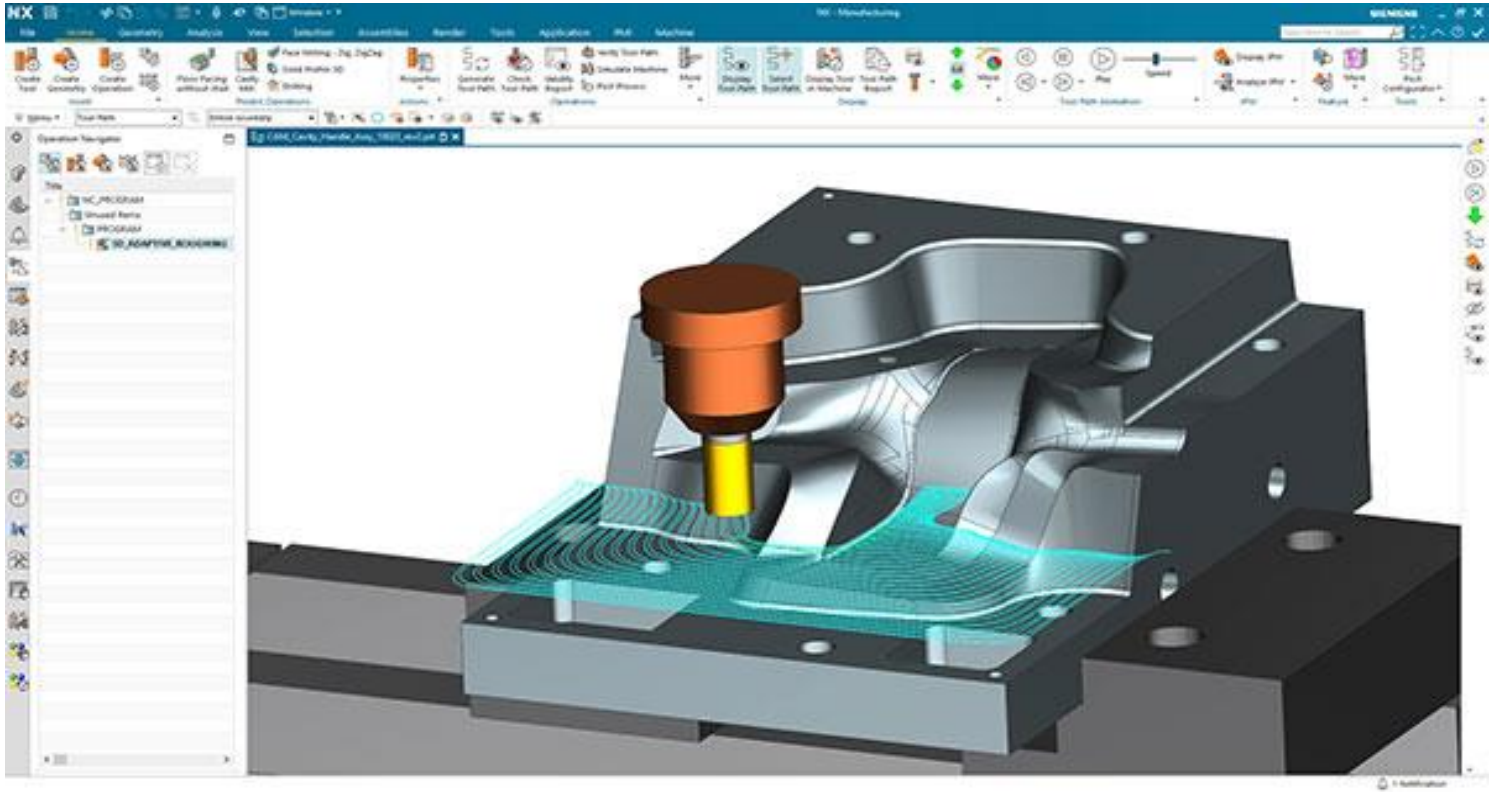

COMPONENTS OF COMPUTER AIDED MANUFACTURING

- A part created in CAD can be downloaded and manufactured, without a human hand touching the part.
- The process is called CAM, and involves CAD, Networking, and NC programming.

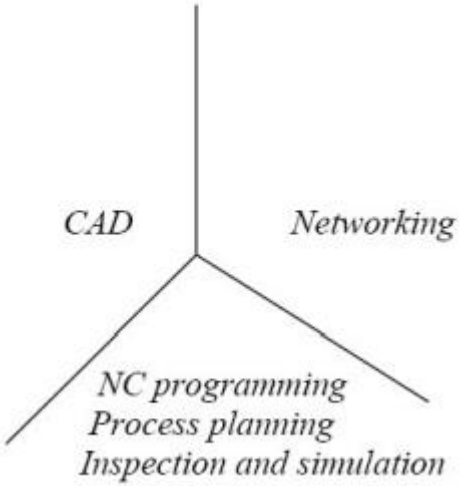

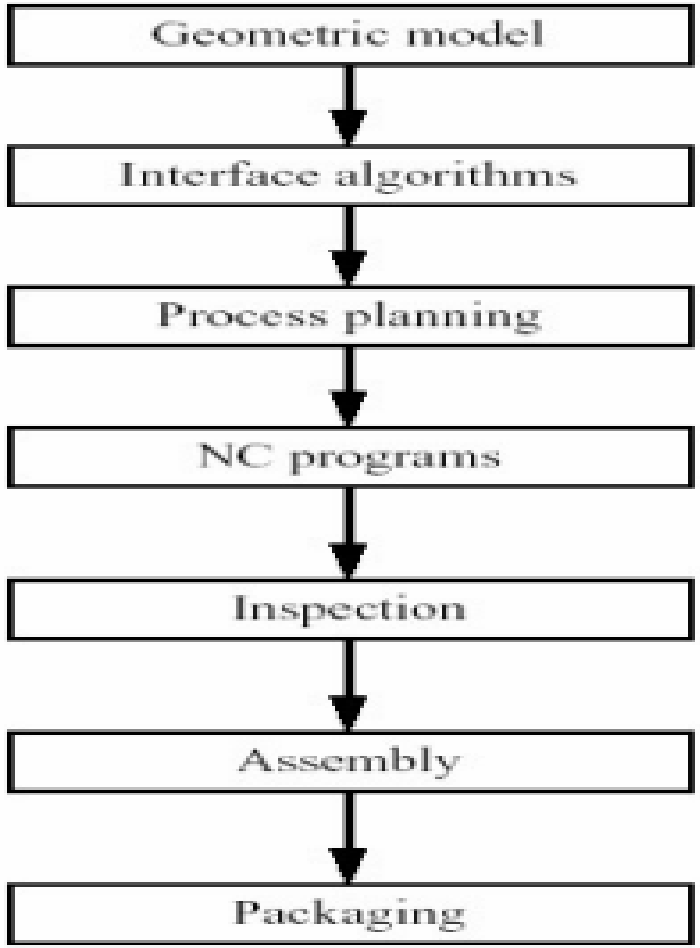

FUNCTIONS OF CAM

- **Planning the manufacturing activities.**

  Computer - Aided Process Planning (CAPP)
  Computer -Assisted NC part programming
  Computerized machinability data system
  Development of work standards
  Cost estimating
  Production and inventory planning
  Computer - aided line balancing

- **Controlling the manufacturing activities.**

  Process monitoring and control
  Quality control
  Shop floor control
  Inventory control
  Just-in-time production system

BENEFITS OF CAM

- Use of computers in manufacturing activities allows changes in production lines by making changes in the programs. This gives the operation flexibility.
- Better communication between workstations due to networking leads to shorter lead time.
- The manufacturing methods and controls make the manufacturing system more reliable. The maintenance cost is reduced because of the proper monitoring and control by the computer.
- Use of NC/CNC machines reduce the scrap and rework.
- Use of computers for various activities and their networking helps better management and control.
- Reduction in personnel requirement.
- Better communication between managers, Engineers and designers through networking.

INTRODUCTION TO NC MACHINES

- Controlling a machine tool by means of prepared program, which consists of blocks, or series of numbers, is know as numerical control (NC).
- Numerical Control (NC) refers to the method of controlling the manufacturing operation by means of directly inserted coded numerical instructions into the machine tool.
- It is important to realize that NC is not a machining method; rather, it is a concept of machine control.
- The most popular applications of NC are in machining, NC can be applied to many other operations, including welding, sheet metalworking, riveting, etc.
- A system in which actions are controlled by direct insertion of Numerical Data at some point. The system must automatically interpret at least some portion of this data.
- Numerical Control is defined as a form of software controlled automation, in which the process is controlled by alphanumeric characters or symbols.

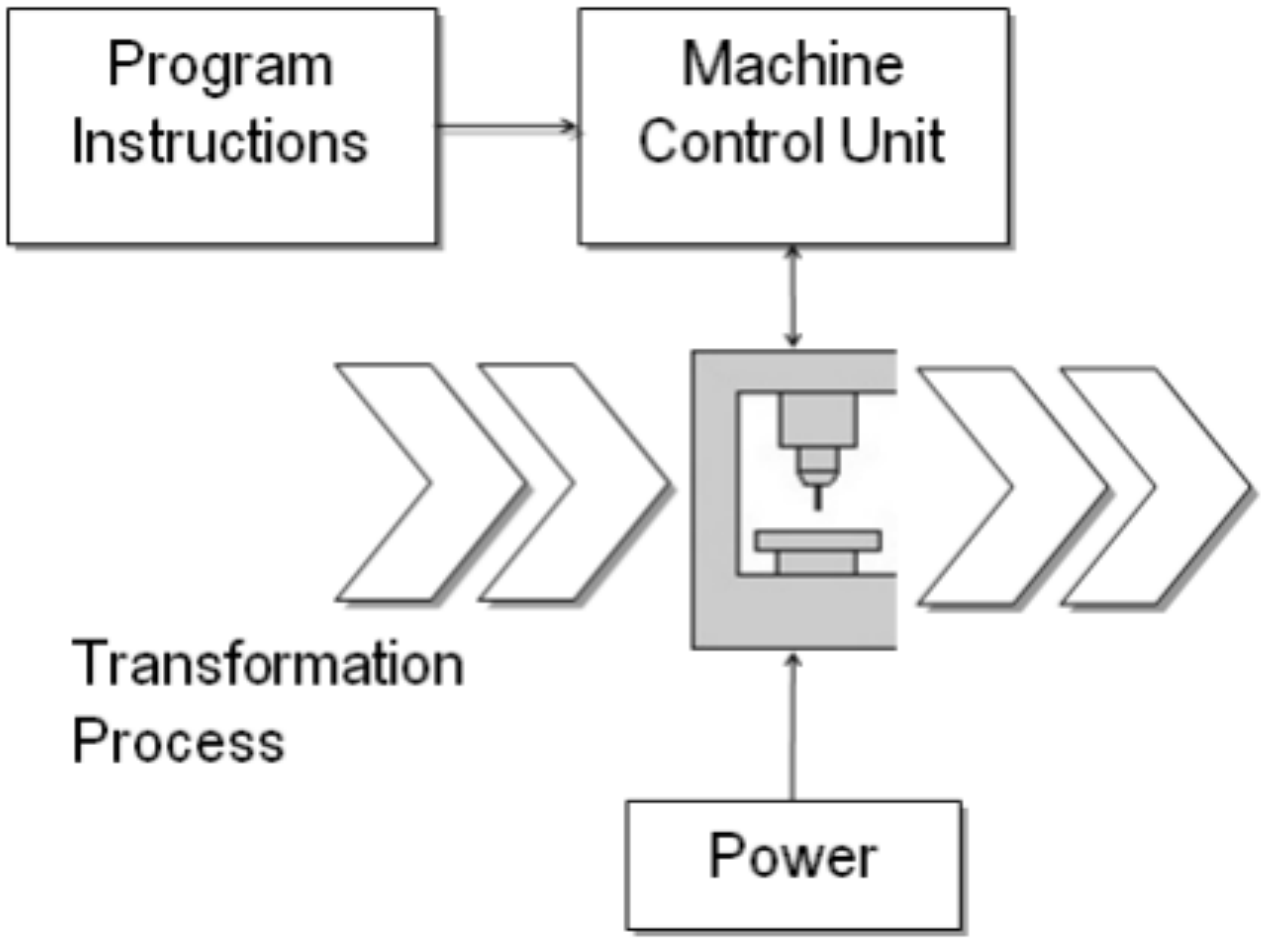
Program Instructions
Machine Control Unit
Transformation Process
Power

Advantages of NC over conventional methods

- **Higher precision**: NC machine tools are capable of machining at very close tolerances, in some operations as small as 0.005 mm;
- **Better quality**: NC systems are capable of maintaining constant working conditions for all parts in a batch thus ensuring less spread of quality characteristics;
- **Higher productivity**: NC machine tools reduce drastically the non machining time. Adjusting the machine tool for a different product is as easy as changing the computer program and tool turret with the new set of cutting tools required for the particular part.
- **Multi-operational machining**: Some NC machine tools, for example machine centers, are capable of accomplishing a very high number of machining operations thus reducing significantly the number of machine tools in the workshops.
- **Low operator qualification**: The role of the operation of a NC machine is simply to upload the work piece and to download the finished part. In some cases, industrial robots are employed for material handling, thus eliminating the human operator.
- **Less time**: An easy adjustment of the machine, adjustment requires less time.

TYPES OF NC SYSTEMS

- Machine controls are divided into three groups
    1. Traditional numerical control (NC)
    2. Computer numerical control (CNC)
    3. Distributed numerical control (DNC)

BASIC COMPONENTS OF AN NC SYSTEM

- An operational numerical control system consists of the following three basic components:
    1. Program of instructions
    2. Controller unit, also called a machine control unit (MCU)
    3. Machine tool or other controlled process

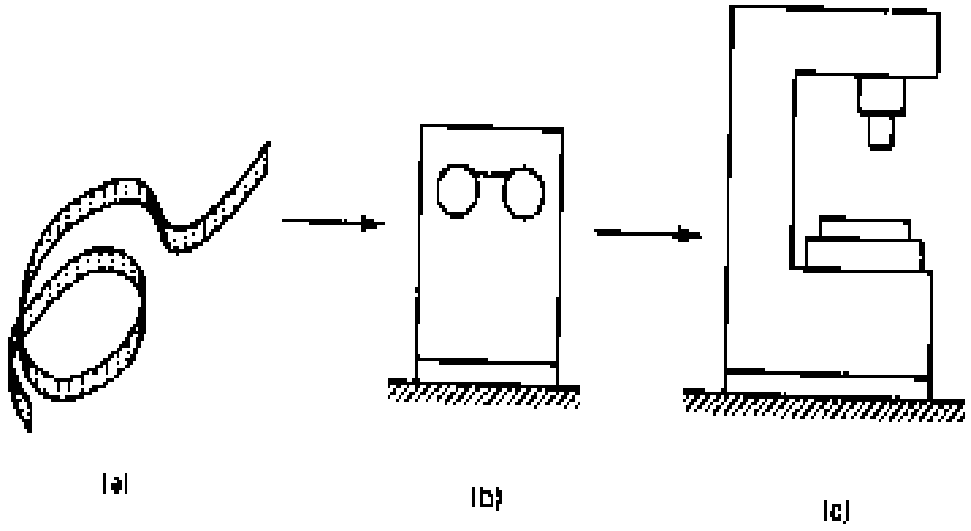

THE NC PROCEDURE

- Process planning.
- Part programming
    1. Manual part programming
    2. Computer-assisted part programming
- Tape preparation.
- Tape verification.
- Production

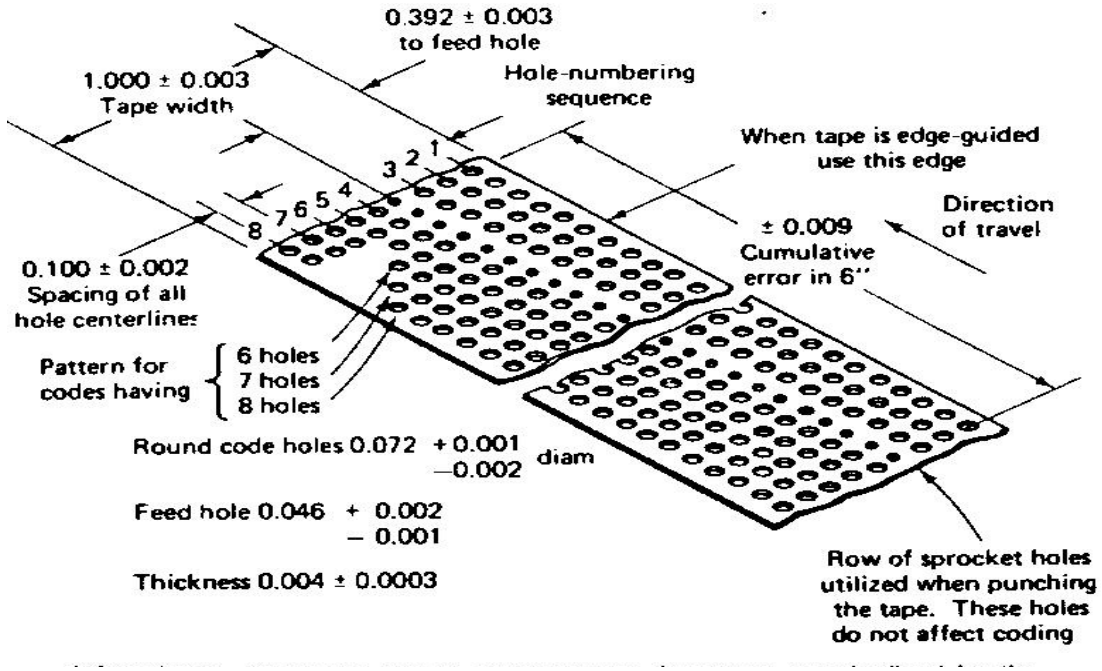

NC COORDINATE SYSTEMS

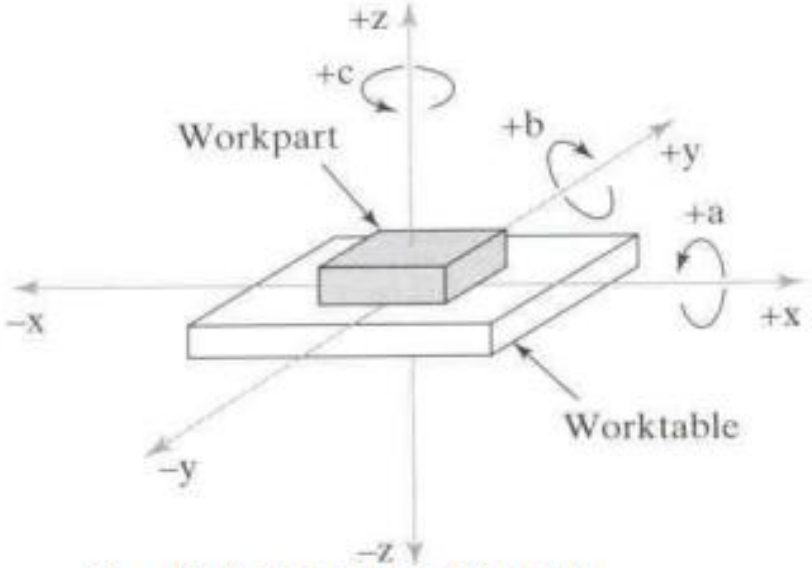

(a) Flat and prismatic work

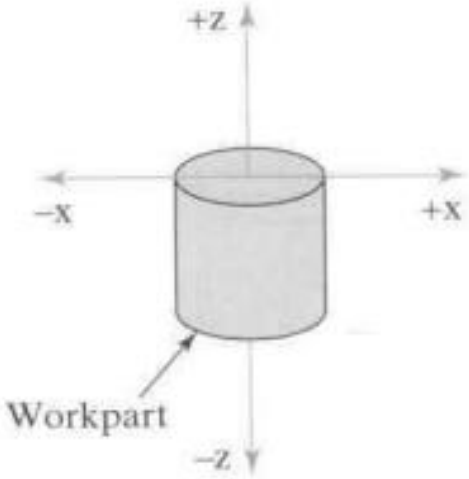

(b) Rotational work

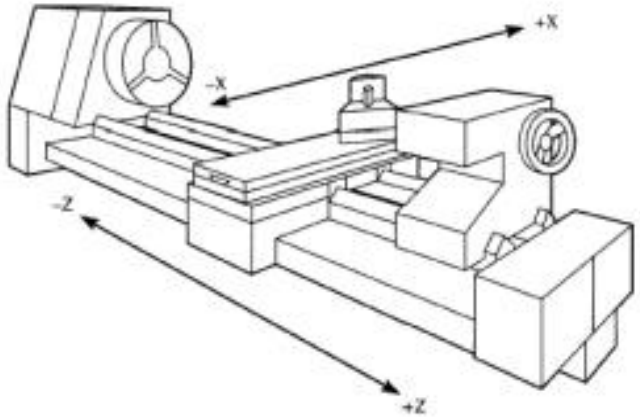

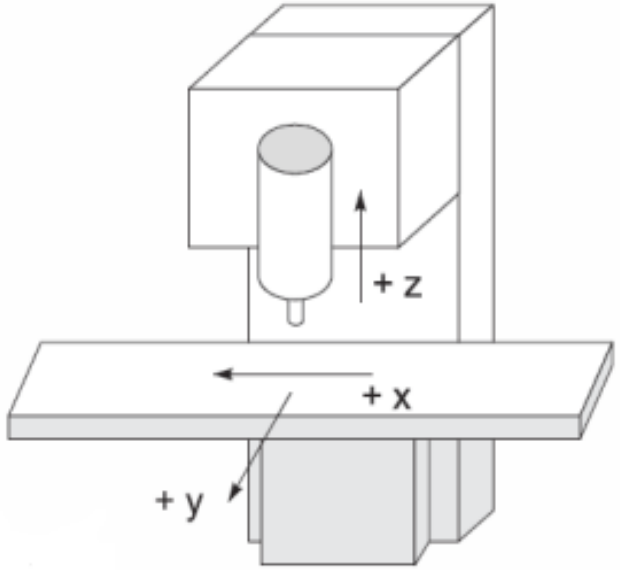

Fixed zero and floating zero

NC machines have either of two methods for specifying the zero point:

- The first possibility is for the machine to have a **fixed zero**.
- In this case, the origin is always located at the same position on the machine table.
- Usually, that position is the southwest corner (lower left-hand corner) of the table and all tool locations will be defined by positive x and y coordinates.
- The second and more common feature on modern NC machines allows the machine operator to set the zero point at any position on the machine table. This feature is called **floating zero**.
- The part programmer is the one who decides where the zero point should be located. The decision is based on part programming convenience.

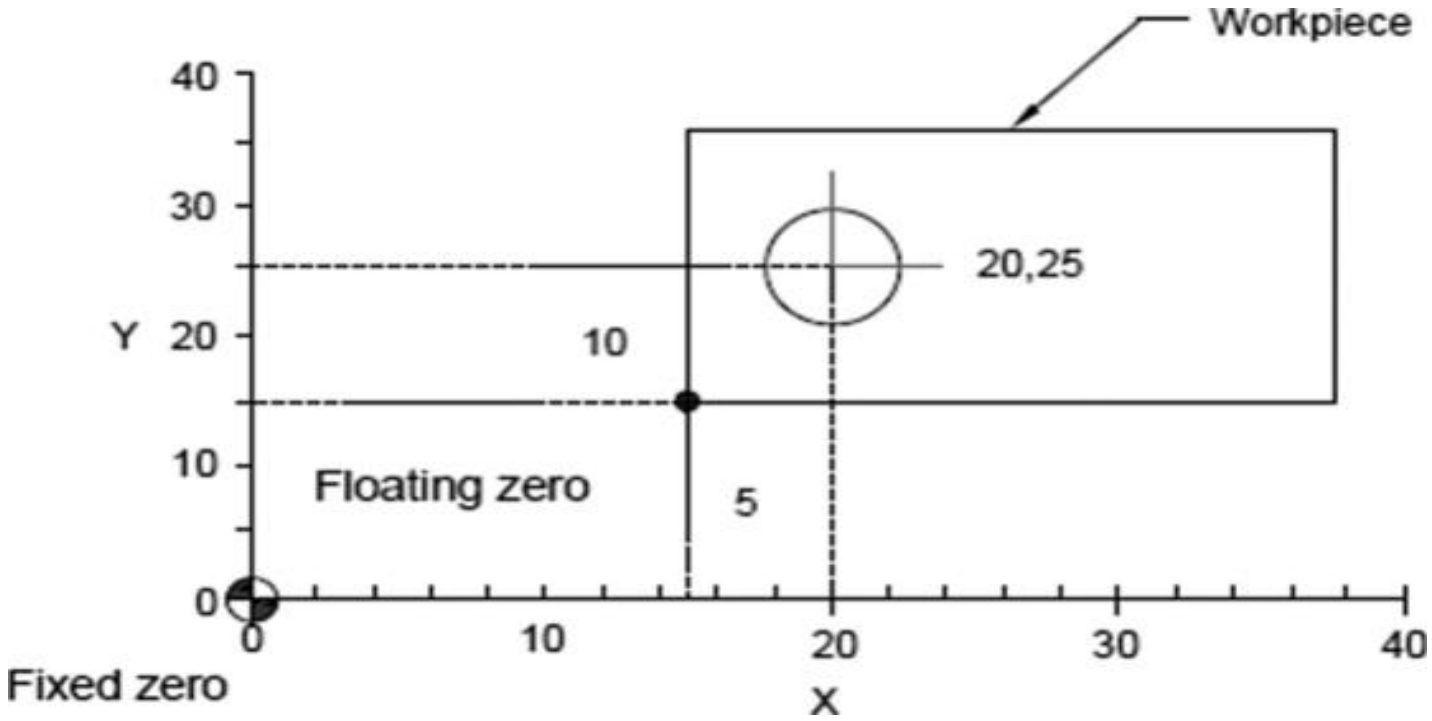
Workpiece
40
30
Y 20
10
0
20,25
10
Floating zero
5
0
10
20
30
40
X
Fixed zero

Absolute positioning and incremental positioning

- In an absolute system all references are made to the origin of the coordinate system. All commands of motion are defined by the absolute coordinate referred to the origin.
- Incremental positioning always uses as a reference to the preceding point in a sequence of points. The disadvantage of this system is that if an error occurs, it will be accumulated

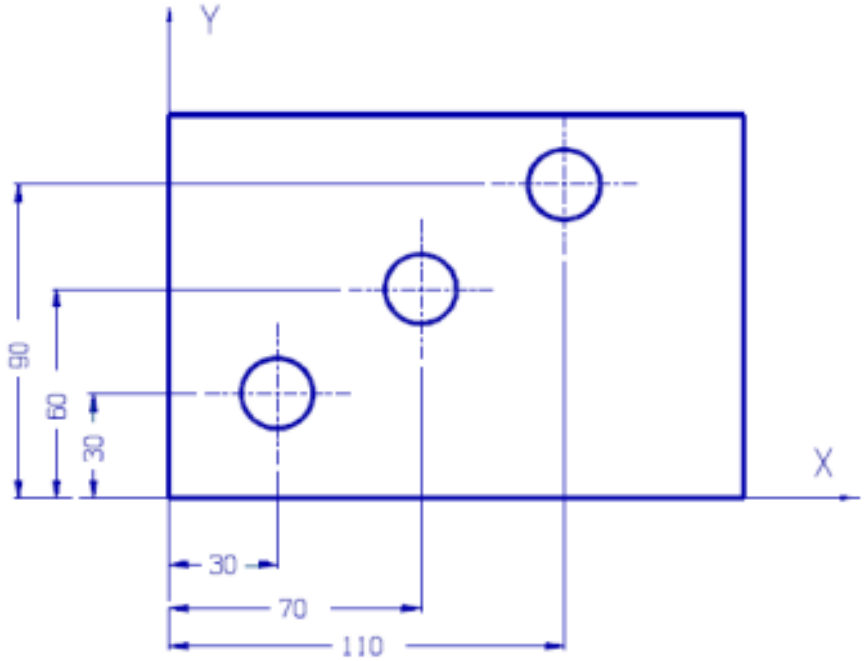

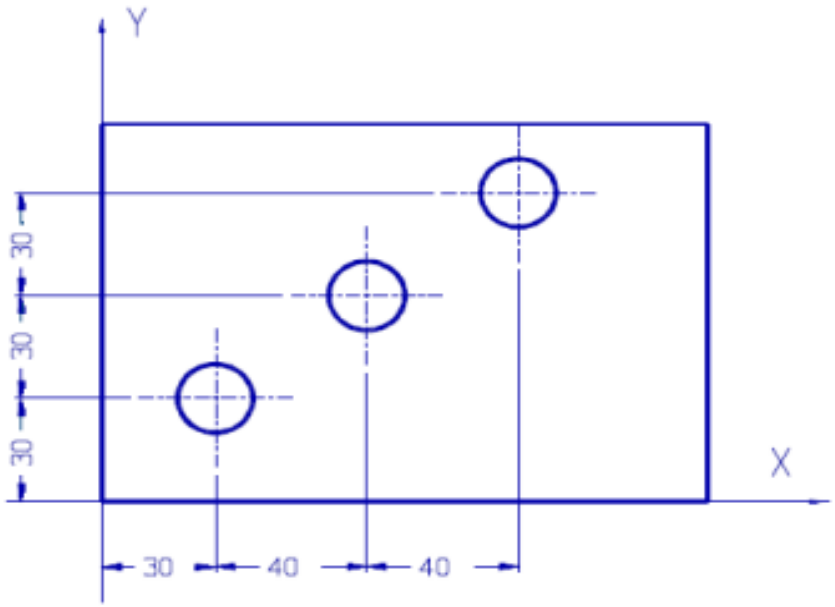

NC MOTION CONTROL SYSTEMS

1. Point-to-point
2. Straight cut
3. Contouring

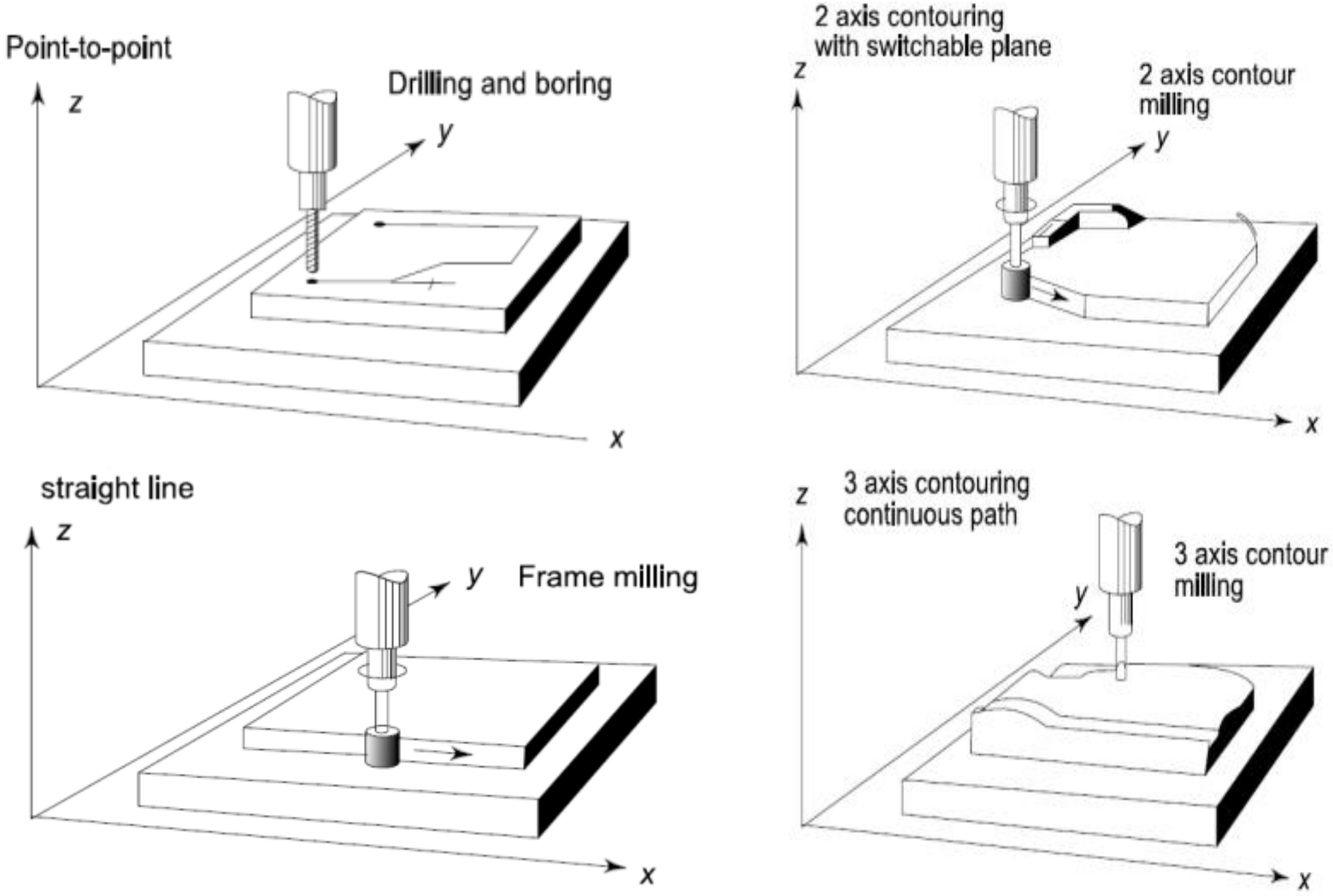

Interpolation Methods

1. **Linear interpolation**
   Straight line between two points in space
2. **Circular interpolation**
   Circular arc defined by starting point, end point, center or radius, and direction
3. **Helical interpolation**
   Circular plus linear motion
4. **Parabolic and cubic interpolation**
   Free form curves using higher order equations

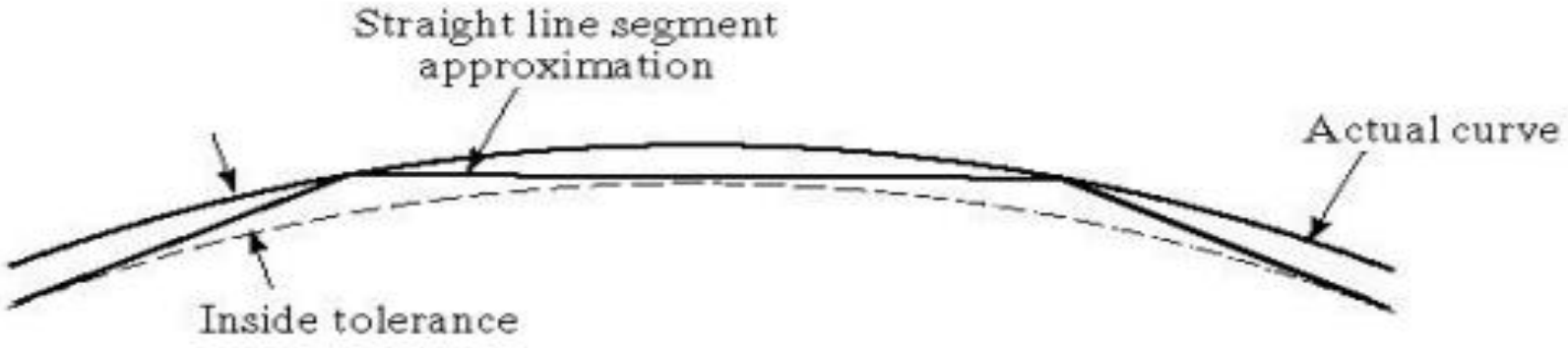

NC part programming

- Numerical control part programming is the procedure by which the sequence of processing steps to be performed on the NC machine is planned and documented.
- It involves the preparation of a punched tape (or other input medium) used to transmit the processing instructions to the machine tool.

Bit – 0 or 1 = absence or presence of hole in the tape

Character – row of bits across the tape

Word – sequence of characters (e.g., y-axis position)

Block – collection of words to form one complete instruction

Part program – sequence of instructions (blocks)

Block Format

Organization of words within a block in NC part program

Also known as tape format because the original formats were designed for punched tape

Word address format - used on all modern CNC controllers

- Uses a letter prefix to identify each type of word
- Spaces to separate words within the block
- Allows any order of words in a block
- Words can be omitted if their values do not change from the previous block

N - sequence number prefix

G - preparatory words

Example: G00 = PTP rapid traverse move

X, Y, Z - prefixes for x, y, and z-axes

F - feed rate prefix

S - spindle speed

T - tool selection

M - miscellaneous command

Example: M07 = turn cutting fluid on

Example: Word Address Format

N001 G00 X07000 Y03000 M03

N002 Y06000

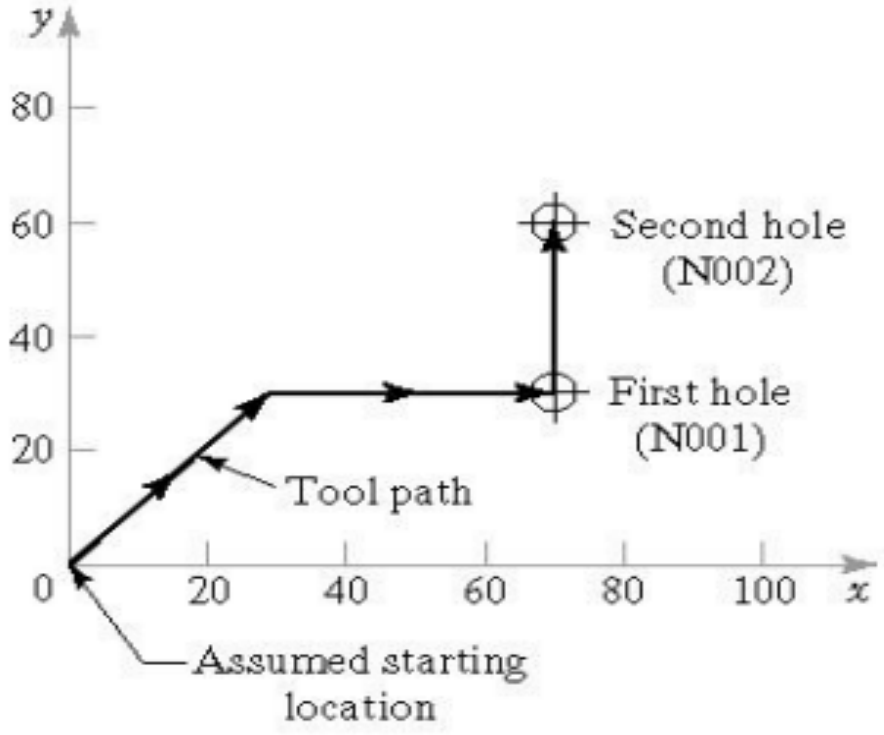

PROGRAMMING CODES

G Codes and M Codes

G CODES - preparatory functions

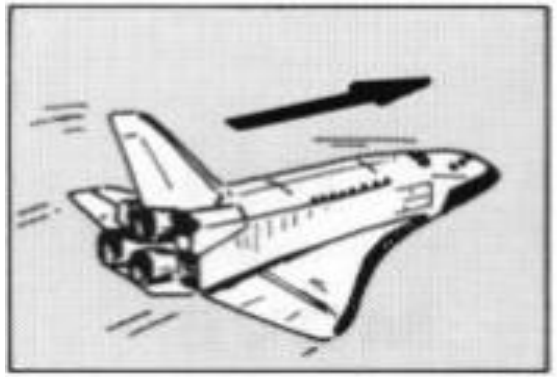

G00
RAPID TRAVERSE

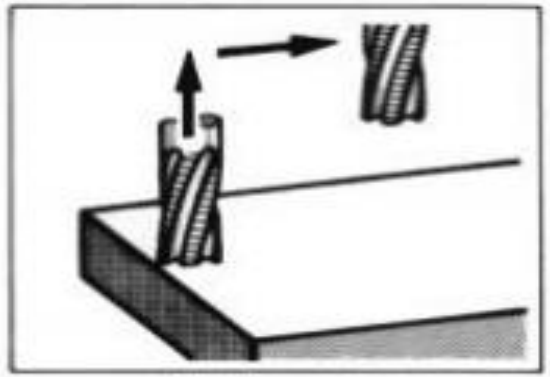

G01
LINEAR INTERPOLATION
(STRAIGHT LINE MOVEMENT)

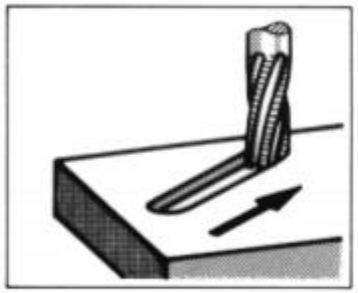

Group	Code	Function
01	G00	Rapid positioning
01	G01	Linear interpolation
01	G02	Circular interpolation clockwise (CW)
01	G03	Circular interpolation counterclockwise (CCW)
06	G20*	Inch input (in.)
06	G21*	Metric input (mm)
	G24	Radius programming (**)
00	G28	Return to reference point
00	G29	Return from reference point
	G32	Thread cutting (**)
07	G40	Cutter compensation cancel
07	G41	Cutter compensation left
07	G42	Cutter compensation right
08	G43	Tool length compensation positive (+) direction
08	G44	Tool length compensation minus (-) direction
08	G49	Tool length compensation cancel
	G84	Canned turning cycle (**)
03	G90	Absolute programming
03	G91	Incremental programming

(*) - on some machines and controls, these may be G70 (inch) and G71 (metric)

(**) - refers only to CNC lathes and turning centers.

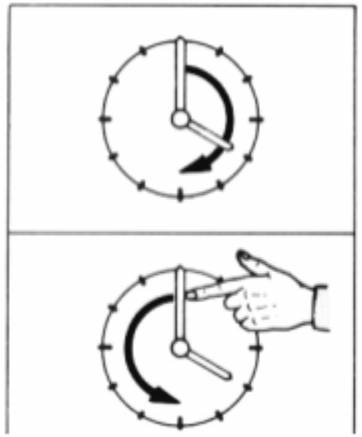

G02
CIRCULAR INTERPOLATION
(CLOCKWISE)

G03
CIRCULAR INTERPOLATION
(COUNTERCLOCKWISE)

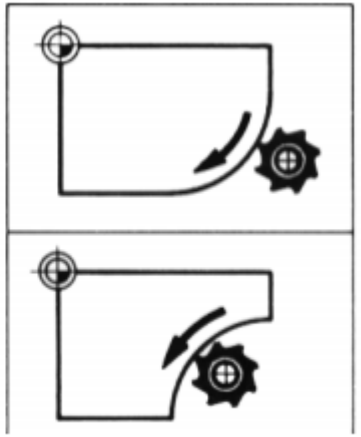

M CODES - miscellaneous functions

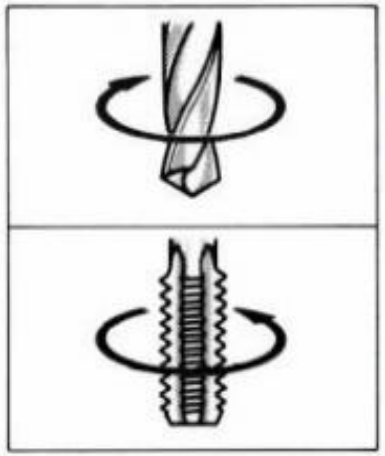

M03
DIRECTION OF ROTATION
(CLOCKWISE)

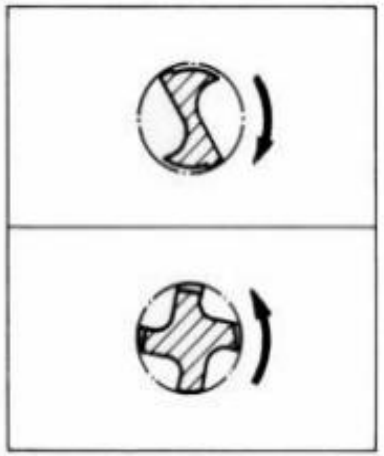

M04
DIRECTION OF ROTATION
(COUNTERCLOCKWISE)

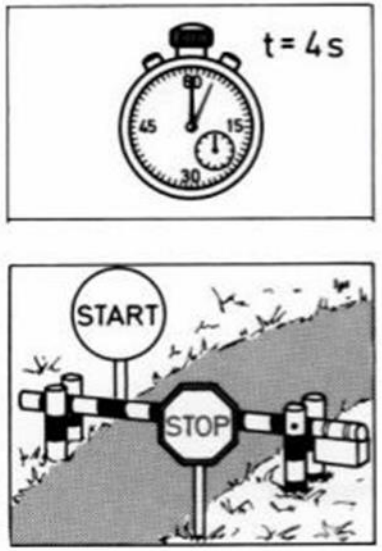

M06
TOOL CHANGE WITH
AUTOMATIC RETRACTION

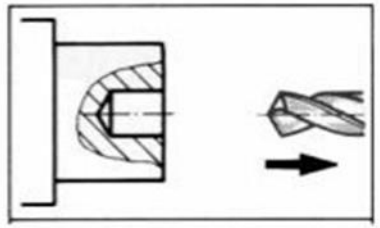

M30
END OF PROGRAM
AND
RETURN TO BEGINNING
OF PROGRAM

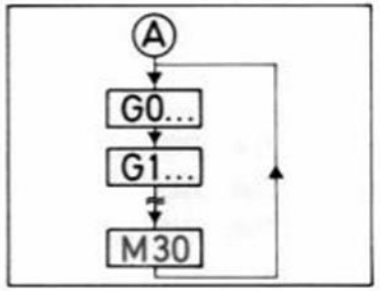

Code	Function
M00	Program stop
M02	End of program
M03	Spindle start (forward CW)
M04	Spindle start (reverse CCW)
M05	Spindle stop
M06	Tool change
M08	Coolant on
M09	Coolant off
M10	Chuck - clamping (**)
M11	Chuck - unclamping (**)
M12	Tailstock spindle out (**)
M13	Tailstock spindle in (**)
M17	Toolpost rotation normal (**)
M18	Toolpost rotation reverse (**)
M30	End of tape and rewind
M98	Transfer to subprogram
M99	End of subprogram

(**) - refers only to CNC lathes and turning centers.

Block of Information

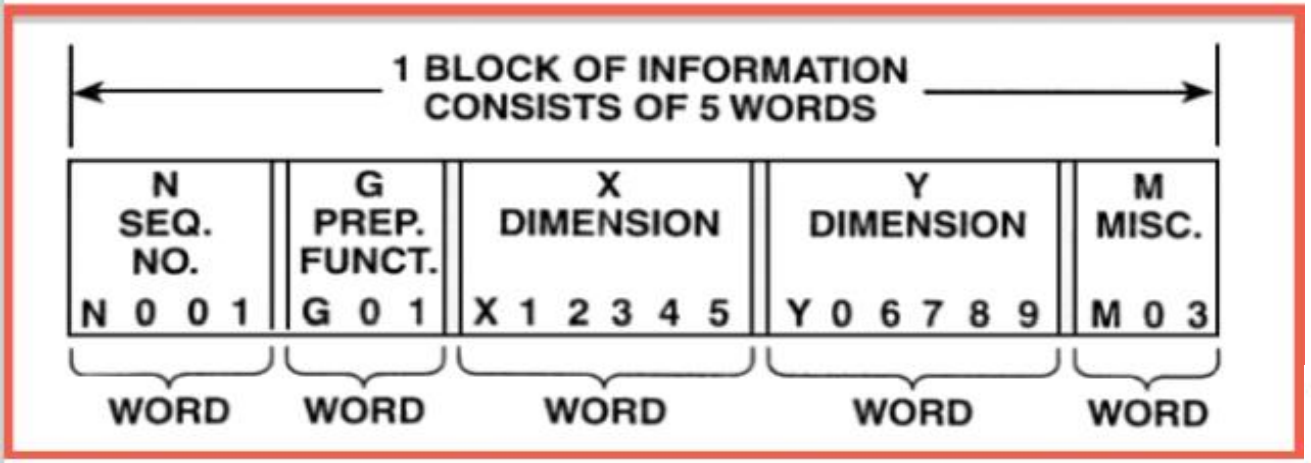

complete block of information consists of five words

- N001 represents the sequence number of the operation.
- G01 represents linear interpolation
- X12345 will move the table 1.2345 in. in a positive direction along the X axis.
- Y06789 will move the table 0.6789 in. along the Y axis
- M03 Spindle on CW.

00002	Program number
N02 G21	Metric programming
N03 M03 S1000	Spindle start clockwise with 1000rpm
N04 G00 X0.0 Y0.0	Rapid motion towards (0,0)
N05 G00 Z10.0	Rapid motion towards Z=10 plane
N06 G00 X10.0	Machining positive X side
N07 G00 Z0.0	
N08 G01 X8.0 Y2.0	
N09 G03 X2.0 Y8.0 R6.0	
N10 G01 X0.0 Y10.0	
N11 G00 Z10.0	
N12 G00 X0.0 Y0.0	
N13 G11	Mirror image on X axis
N14 G25 N06.12	Repeat lines 6 to 12 (machining of negative X side)
N15 G10	Cancellation of mirror image
N16 M05 M09	Spindle stop and program end

COMPUTER-ASSISTED PART PROGRAMMING