Metal Cutting & Machining

MODULE-4

Prepared By:
Dr. S.R. Parimanik
Dr. A.K. Pattanaik

Prepared By:

Dr. Soumya Ranjan Parimanik
Guest Faculty
Department of Mechanical Engineering,
Government College of Engineering, Kalahandi

Dr. Ajit Kumar Pattanaik
Assistant Professor
Department of Mechanical Engineering,
Government College of Engineering, Kalahandi

Syllabus

Module 4: Tool holding and job holding methods in different machine tools, types of surface generated. Production machine tools: capstan and turret lathes, single spindle and multi spindle semi-automatics, CNC machine tools.

Learning objectives: after this module, students will be able to

- **State the principles** of locating, supporting and clamping the job and the cutting tool in machine tools.
- **Identify the job and tool holding devices** used in lathes, drilling, shaping, planing, slotting, milling, grinding and CNC machines.
- **Explain how surfaces are generated** using Generatrix, Directrix and tool–work motions.
- **Describe the construction and use** of capstan, turret and multi spindle semi-automatic lathes, and **distinguish** capstan from turret lathes.
- **Explain the working principle of NC and CNC** systems: BLU, open and closed loop control, coordinate systems and interpolation.
- **Write simple part program statements** in absolute and incremental modes, and read a word address block.

Prepared By:
Dr. S.P. Parimanik
Dr. A.K. Pattanaik

Contents

No.	Section	Slides
1	Tool Holding and Job Holding Methods in Different Machine Tools	4–33
2	Types of Surface Generated	34–45
3	Production Machine Tools: Capstan and Turret Lathes, Single and Multi Spindle Semi-automatics	46–56
4	CNC Machine Tools	57–74

Prepared By:
Dr. S.R. Parimanik
Dr. A.K. Pattanaik

Tool Holding and Job Holding Methods

Part A

Contents

1. Introduction and principles of mounting
2. Centre lathes
3. Semi-automatic and automatic lathes
4. Drilling machines
5. Shaping, planing and slotting machines
6. Milling machines
7. Grinding machines
8. CNC machine tools
9. Summary

Prepared By:
Dr. S.R. Parimanik
Dr. A.K. Pattanaik

Introduction

- Every machining operation needs **proper positioning, firm gripping and the desired motions** of the job and the tool.
- Mounting of the workpiece and the tool decides the **accuracy of the work, productivity, product quality and process capability**.
- The **job-holding device** is chosen from the machine tool type, the job's size and shape, the machining requirements, and the rate and precision of production.
- A job needs **correct location, strong support and rigid clamping**, quick mounting, and free flow of chips and cutting fluid.
- The **tool-holding method** depends on the tool's type, shape and size.

Prepared By: S.R. Parimanik & Pattanaik

Terms used in this section

- **Blank, workpiece or job:** the material being machined.
- **Mounting:** locating, supporting and clamping the job or tool in the machine tool.

Principles of Mounting Jobs and Cutting Tools

While mounting the job

- Select the work-holding device based on:
  - machine tool configuration
  - shape, size and weight of the blank
  - kind of machining work
  - dimensional accuracy required
  - production volume
- **Correct location, strong support and rigid clamping** against cutting forces
- **Easy and quick** loading and unloading
- **Proper alignment**: coaxiality and concentricity of rotating jobs
- **Free flow** of chips and cutting fluid

While mounting the cutting tool

- Select a suitable **tool holder** and fix the tool firmly in it
- Position and orient the tool according to its:
  - type
  - size and shape
  - geometry
- **Proper alignment** with the machine tool
- **Quick location, strong support, rigid clamping**, with minimum run-out and deflection
- **Easy and quick** mounting and replacement
- **Unobstructed** chip flow and cutting fluid action

This is for educational purpose only.

Job Holding in Centre Lathes: Chucks

Jobs that need **no tailstock support** are mounted in:

1. **Three-jaw self-centring chuck**
2. **Four-jaw independent chuck**
3. **Face plate**
4. **Jigs and fixtures**

- **Three-jaw chuck:** all three jaws move radially together when the scroll (a disc with radial threads) is turned by a key. Pre-machined round bars are held quickly and coaxially.
- **Four-jaw chuck:** each jaw moves independently by its own screw. Holds square, rectangular, hexagonal and irregular jobs, with or without pre-machining.

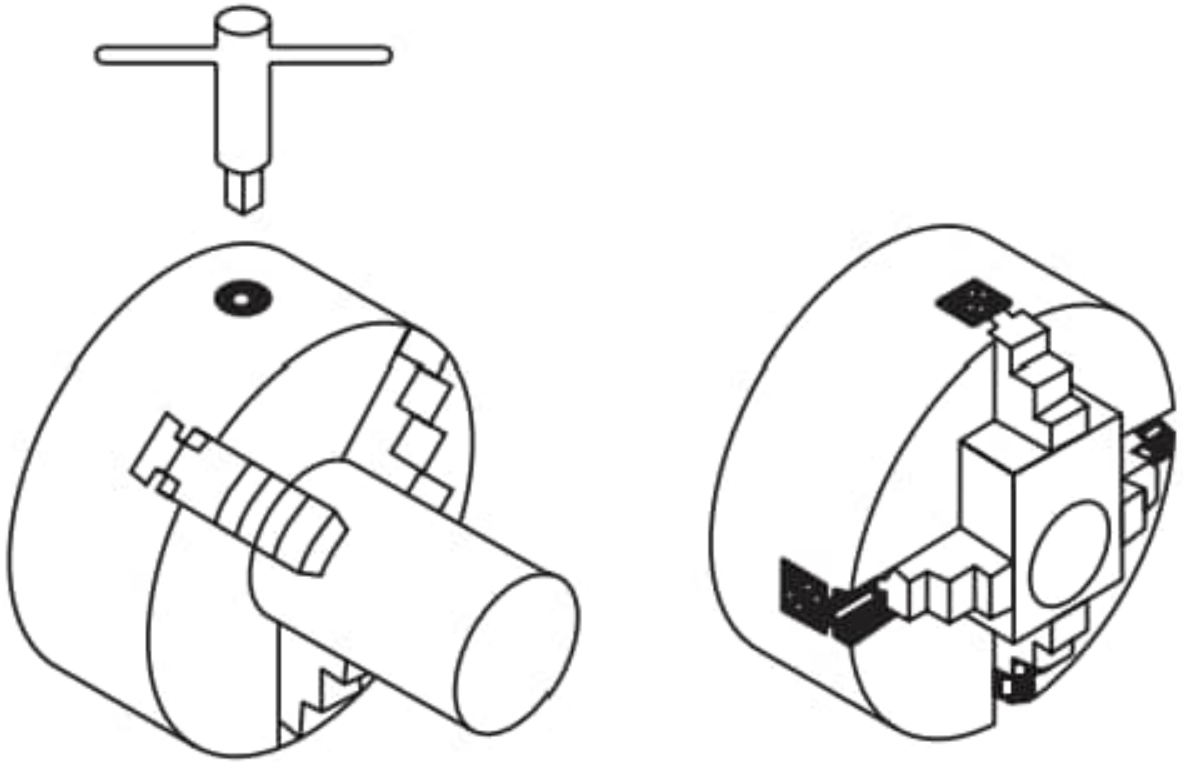

Three-jaw and four-jaw chucks

Prepared
Dr. S.R. P
Dr. A.K

Mounting Odd-Shaped Jobs on a Face Plate

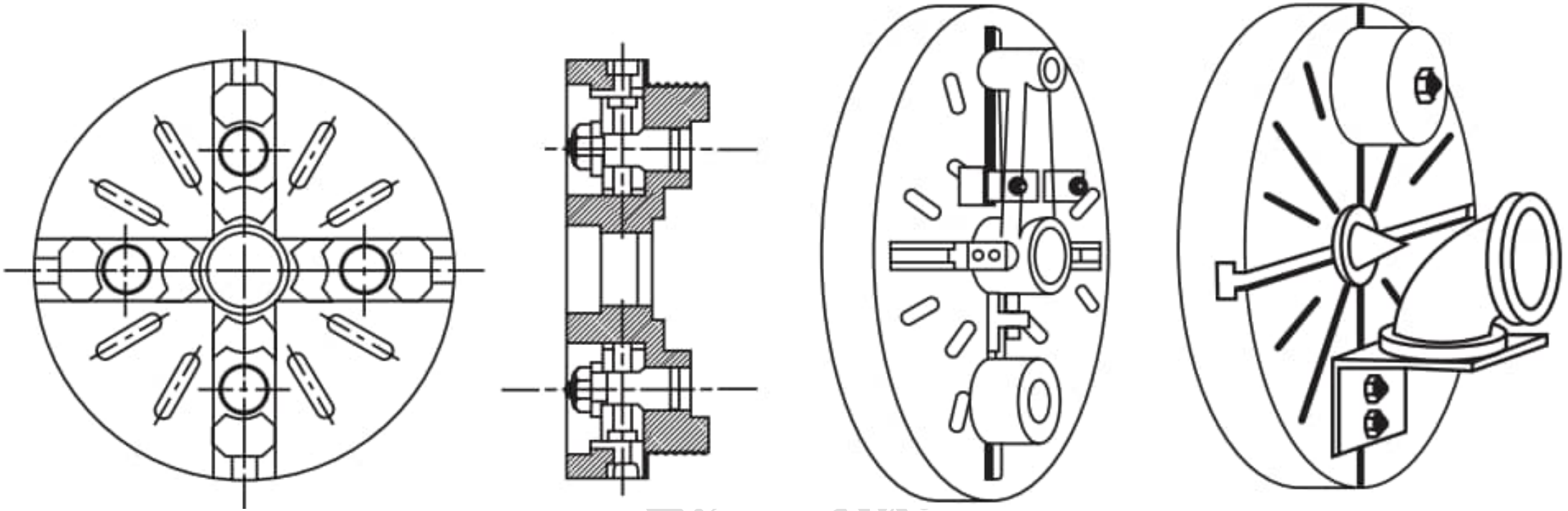

Mounting of odd-shaped jobs on a face plate for boring

- Used for **turning, facing, boring and threading** jobs of odd shape and size that a chuck cannot hold.
- The large face plate is fitted on the **spindle nose**.
- The job is **(a) clamped directly** on the face plate, or **(b) held in a fixture** clamped on it, for batch or small-lot production.

This is for educational purpose only.

Job Holding in Centre Lathes: With Tailstock Support

Jobs needing tailstock support are mounted:

1. **Between centres**
2. **Between chuck and centre**
3. **Between headstock and tailstock with a rest**

- Long slender rods: **live centre** in the spindle, **dead centre** in the tailstock quill.
- Torque reaches the job through a **lathe dog (catcher)** driven by the **driving plate**.
- A **revolving centre** rotates with the job and avoids sliding friction at the tailstock end.

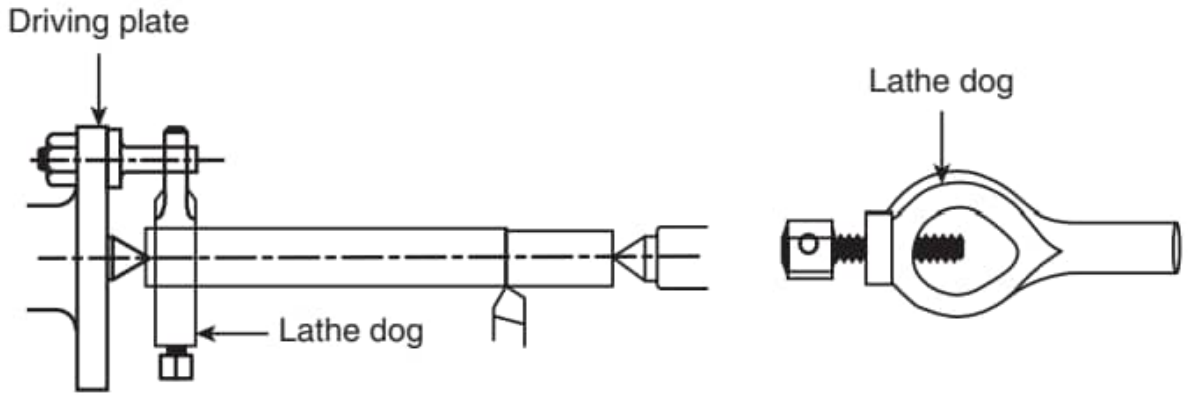

Bar-type job between centres

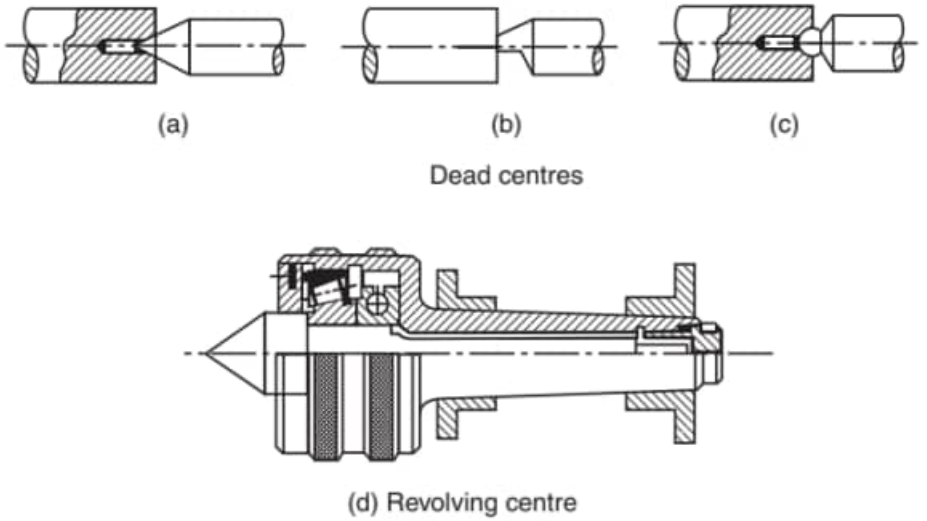

Dead centres and revolving centre

Prepared by Dr. S.R. Parimanik Dr. A.K. P

Chuck-and-Centre Mounting and Steady Rest

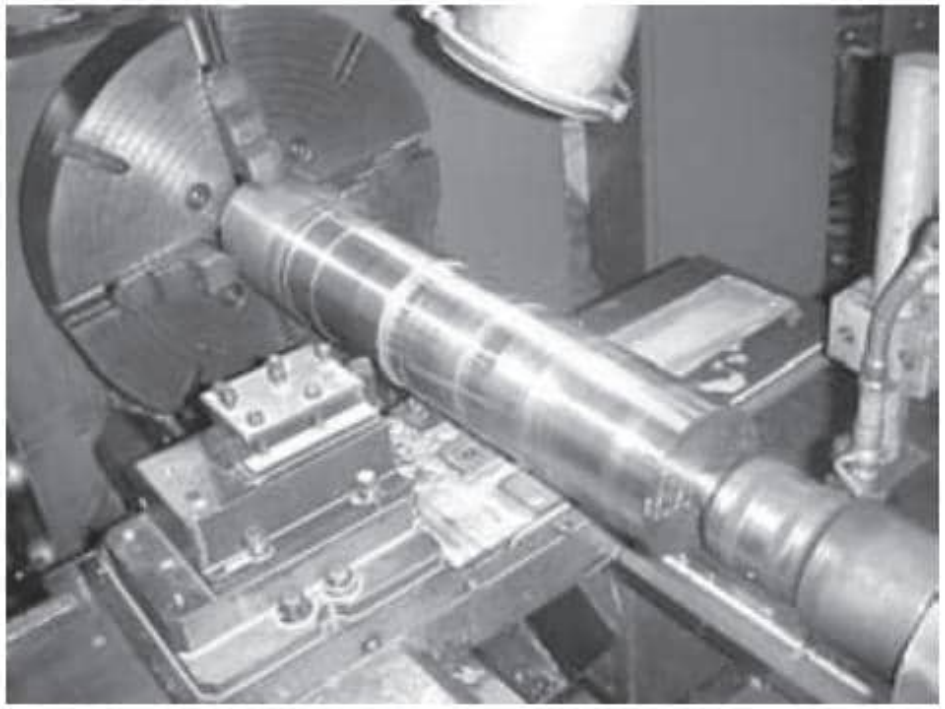

Job held between chuck and centre

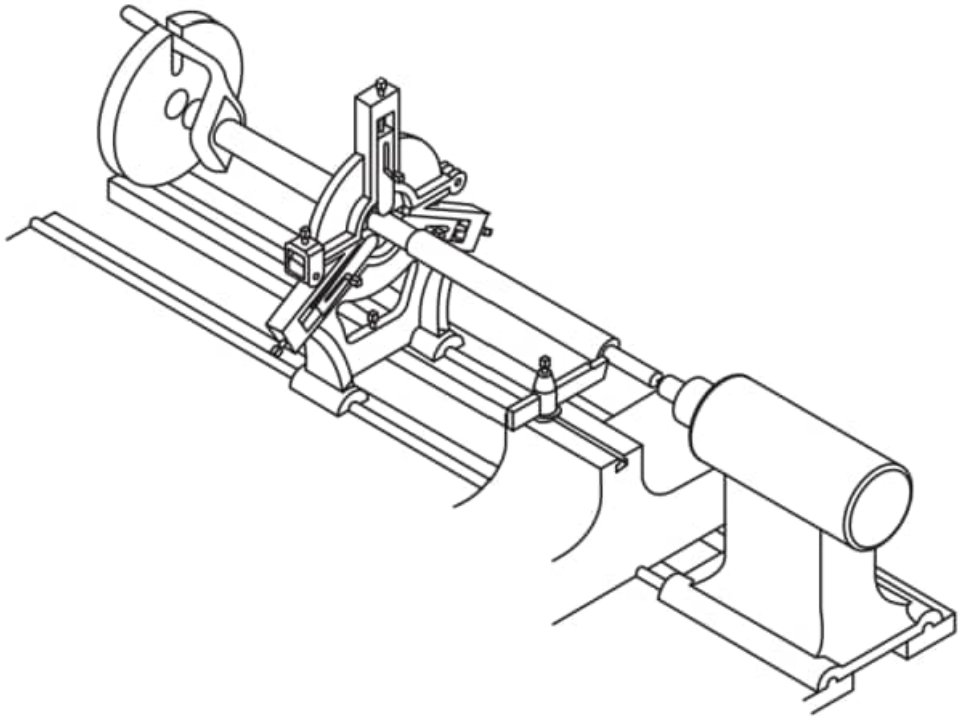

Slender job supported by a steady rest

- **Heavy, long jobs** that need heavy cuts are held in the **chuck** and supported by a **revolving centre** at the tailstock.

- Rests stop **slender jobs** (feed rods, lead screws) deflecting from sagging and cutting forces.
- **Steady rest:** fixed at a suitable location.
- **Follower rest:** moves with the tool in long straight turning.

Dr. S.R. Pa
Dr. A.K. Pa

Mounting Cutting Tools in Centre Lathes

Tools are usually mounted as follows:

1. **HSS shank tools** in the tool post
2. **HSS form and threading tools** in the tool post
3. **Carbide and ceramic inserts** in standard tool holders
4. **Drills and reamers** in the tailstock
5. **Boring tools** in the tool post

- Tool posts are **rotatable** (one tool) or **indexable** (up to four tools).
- Small tool bits fit in a **bar-type tool holder** held in the tool post.

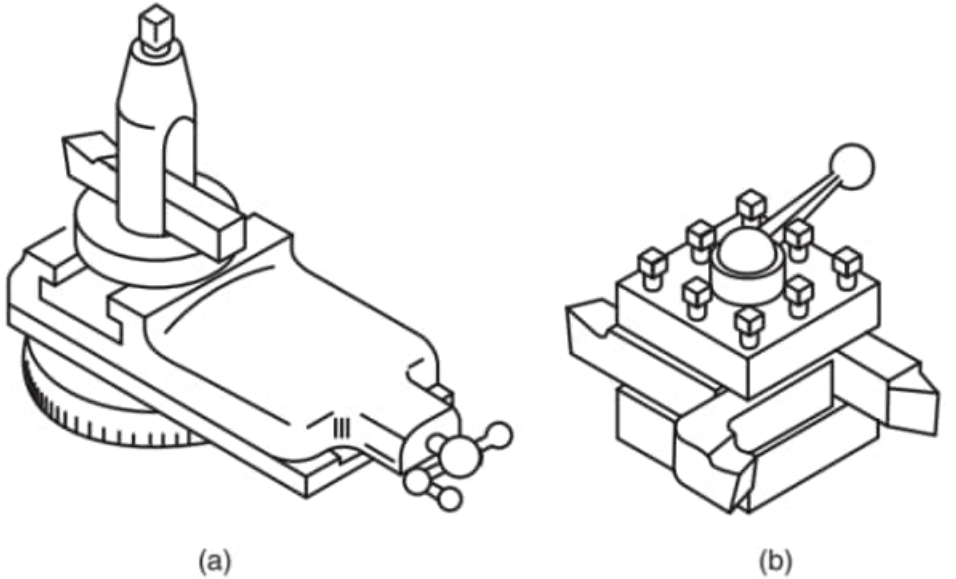

Tool posts: (a) single tool; (b) up to four tools

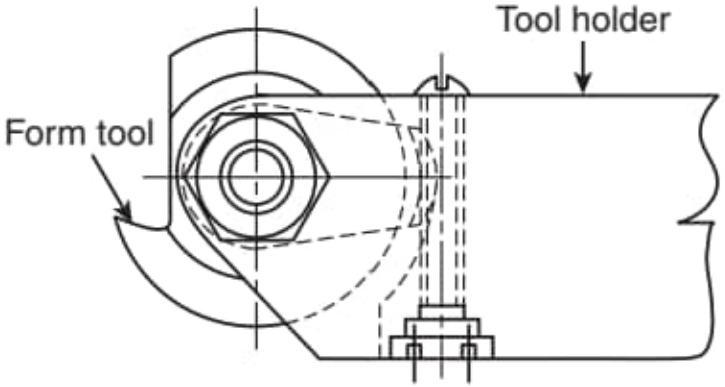

Circular form tool in a tool holder

Prepared By:
Dr. S.R. Pari
Dr. A.K. Pattanaik

Mounting of Tool Inserts by Mechanical Clamping

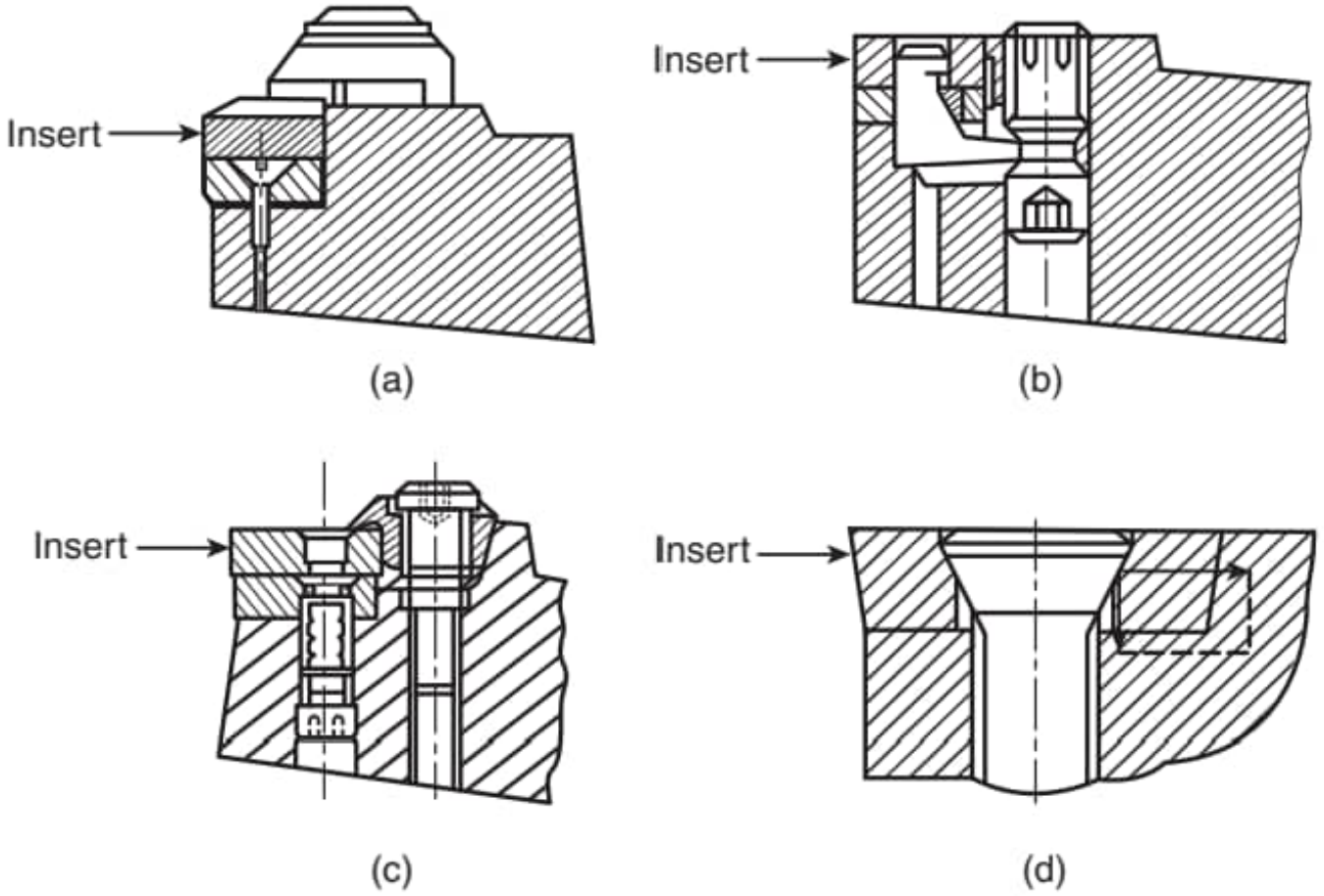

(a) Clamp; (b) lever; (c) pin and clamp; (d) screw

- **Carbide, ceramic and cermet inserts** are clamped in the seat of standard rectangular steel shanks.
- The holder is then mounted in the **tool post**.

Clamping methods

1. Clamp type
2. Lever type
3. Pin and clamp type
4. Screw type

- When a corner wears, the insert is **indexed**; once all corners are used, it is thrown away.

This is for educational purpose only.

Drilling and Boring in a Centre Lathe

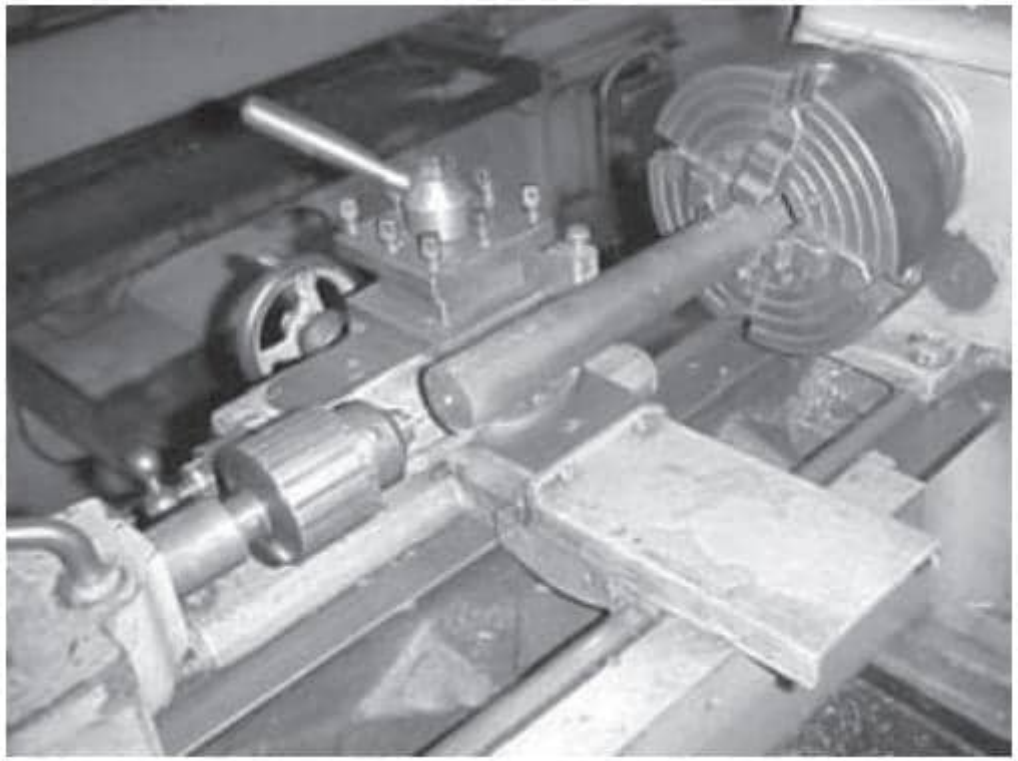

Blank and drill mounted for drilling

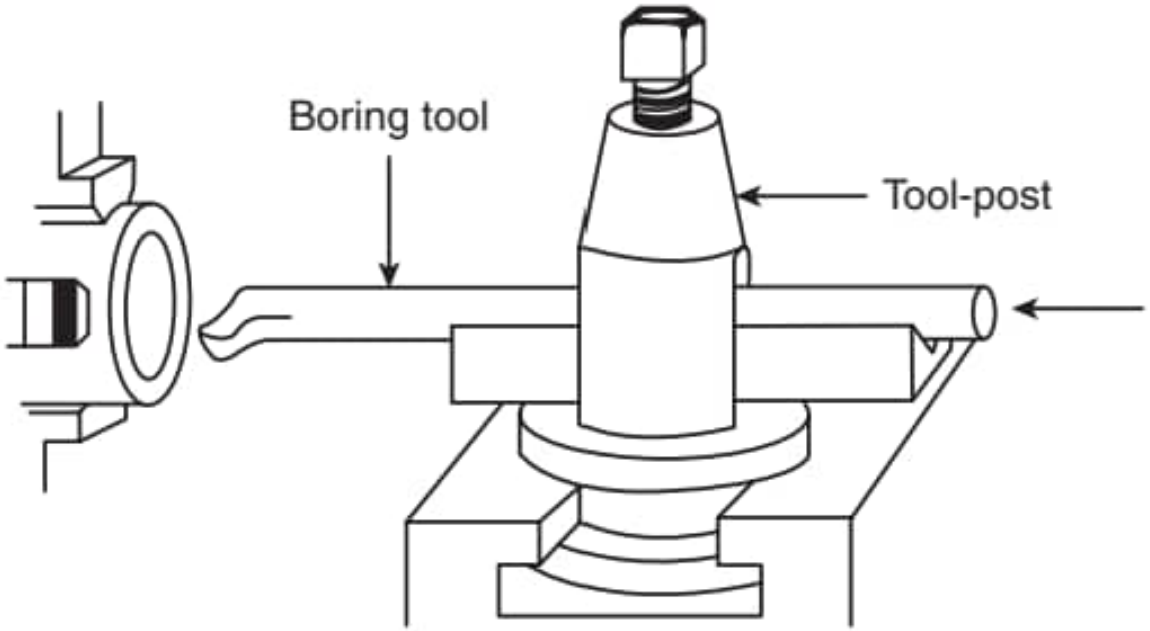

Boring tool in the tool post

- **Drilling:** the drill sits in the **tailstock quill** and is fed against the rotating job. Small straight-shank drills go in a drill chuck; taper-shank drills fit the quill directly or through a socket.
- **Boring:** an HSS boring tool held in the **tool post** moves axially with the saddle through the hole in the rotating job.

This is for educational purpose only.

Job Holding in Semi-Automatic and Automatic Lathes

- Capstan and turret lathes take **chucking-type (disc) and bar-type** jobs; single-spindle automats work on long bars (ϕ 6–20 mm) of round or polygon section.
- There is **no tailstock support**, so the job must be held quickly, coaxially, strongly and rigidly.

Device	How it works and where it is used
Coventry concentric chuck	Three jaws actuated quickly and accurately by a ring cam
Air-operated chuck	Jaws moved by compressed air; hydraulic chucks are used in turret lathes for heavy jobs and cuts
Quick-acting soft-jaw chuck	Used where the gripped portion of the job must stay unaffected
Collet chuck	Holds long thin bars fed through the hollow spindle; works at high speed with accurate location and a strong grip

Prepared By
Dr. S.R. Parimanik
Dr. A.K. Pattanaik

- Collets are actuated **manually or semi-automatically** in capstan and turret lathes, and **automatically** in automatic lathes.

Spring Collets for Bar Stock

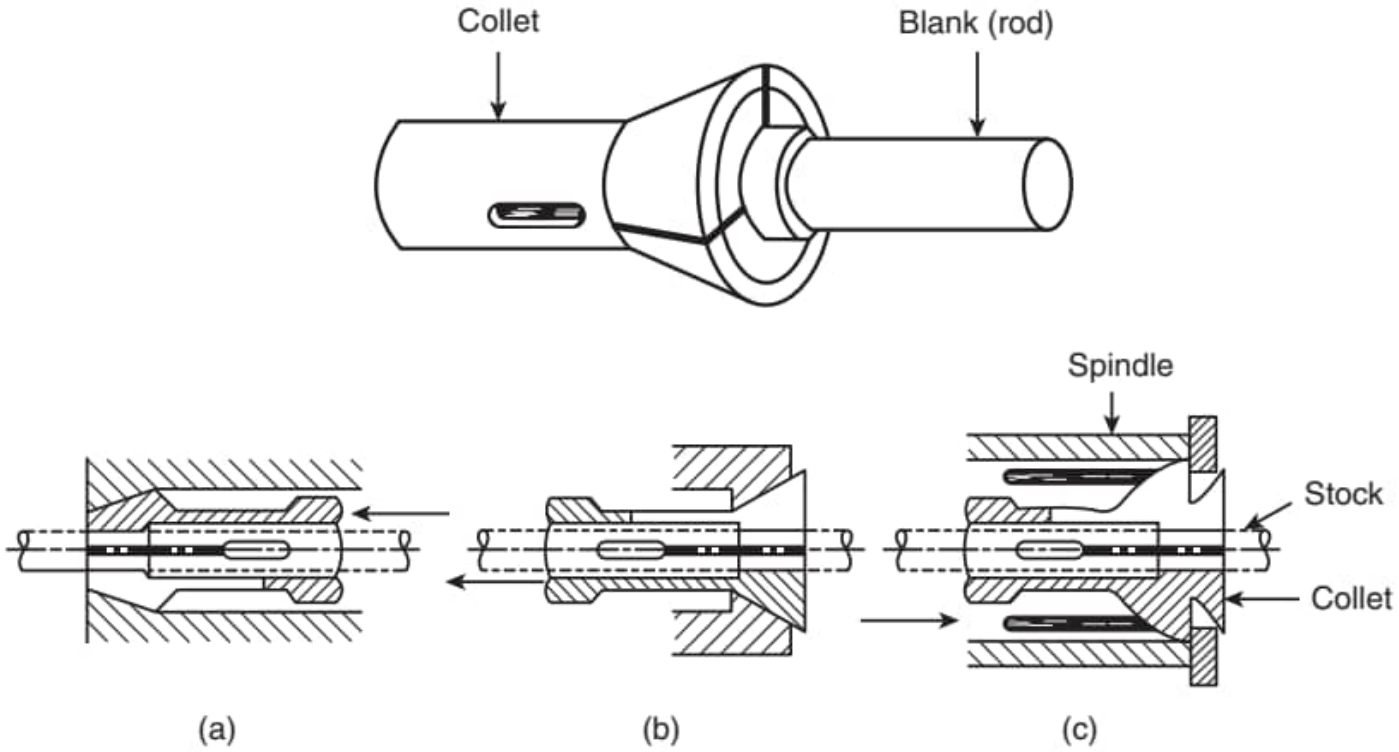

Collets: (a) push type; (b) pull type; (c) stationary type

- Collets are **split at the gripping end**, which makes them springy.
- Closing the collet reduces its bore and grips the bar by **radial force**.

Three types

1. **Push type**
2. **Pull type**
3. **Stationary type**

- Each type has its own advantages; it is chosen to suit the application.

This is for educational purpose only.

Tool Mounting in Capstan and Turret Lathes

Up to **10 or 11 tools** are mounted on:

1. **Front slide:** one tool on the fixed type, up to four on the turret type
2. **Rear slide:** only one cutting tool
3. **Hexagonal turret:** up to six cutting tools

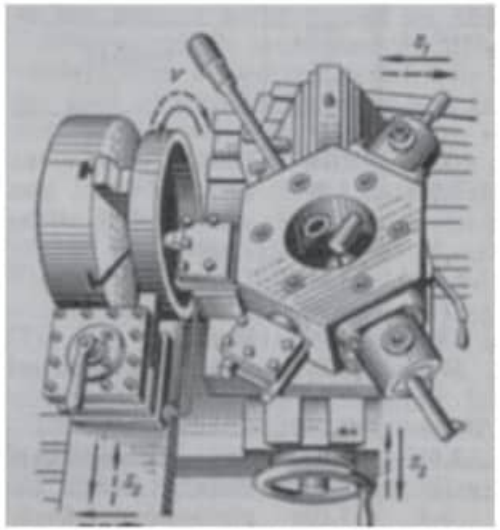

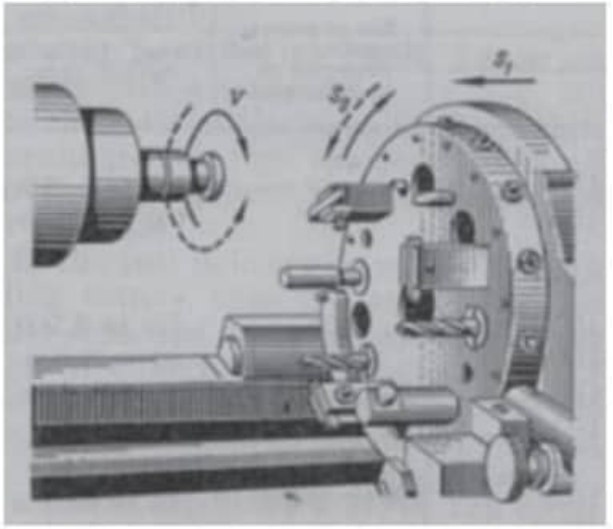

- **Slide tools:** facing, shouldering, grooving, forming, chamfering, parting and turning.
- **Turret tools:** axial-feed work such as turning, drilling, boring, reaming and threading.
- After each operation the turret returns and **indexes by 60°** (or a multiple).
- A stop-stock and revolving centre can also be fitted in the turret.

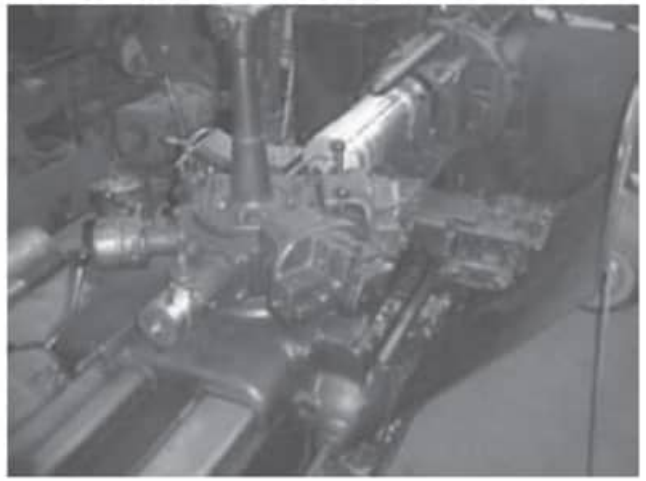

Cutting tools on the turret

Prepared by Dr. S.R. Pa Dr. A.K.

Tool Mounting in Automatic Lathes

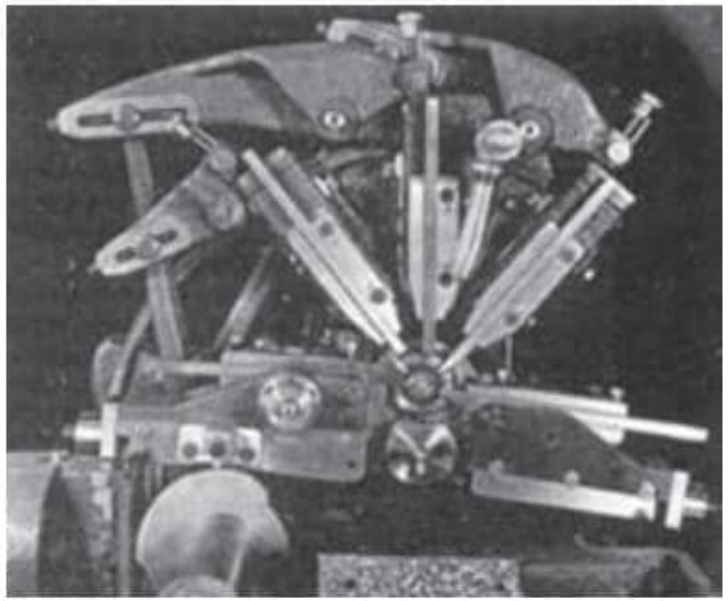

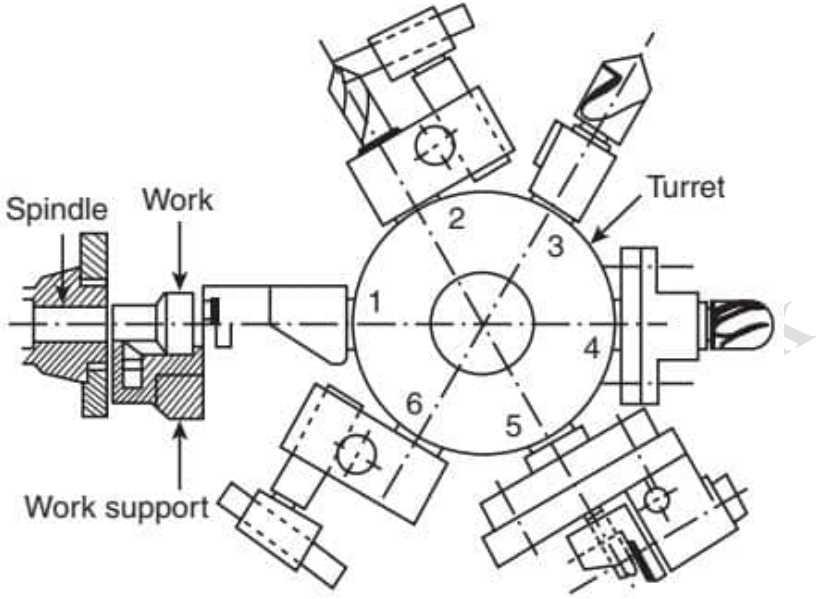

Single-spindle automat: (a) radial tools; (b) turret tools

In **single-spindle automats**:

- Tools needing **transverse feed** are mounted in the **radial slides**.
- Tools needing **axial travel** are mounted in the **hexagonal or octagonal turret**.
- Overlapping the radial and axial tool actions shortens the cycle.

This is for educational purpose only.

Job Mounting in Drilling Machines

In column and radial drilling machines, the blank is:

1. **Clamped directly on the bed**, when heavy or odd-shaped
2. Held in a **vice** clamped on the bed
3. Held in a **jig** clamped on the bed

- Vices for small jobs: **plain, swivelling and universal**.
- Jobs, vices and jigs are clamped with **clamp plates and T-bolts**.

Prepared By:
Dr. S.R. Pari
Dr. A.K. Pa

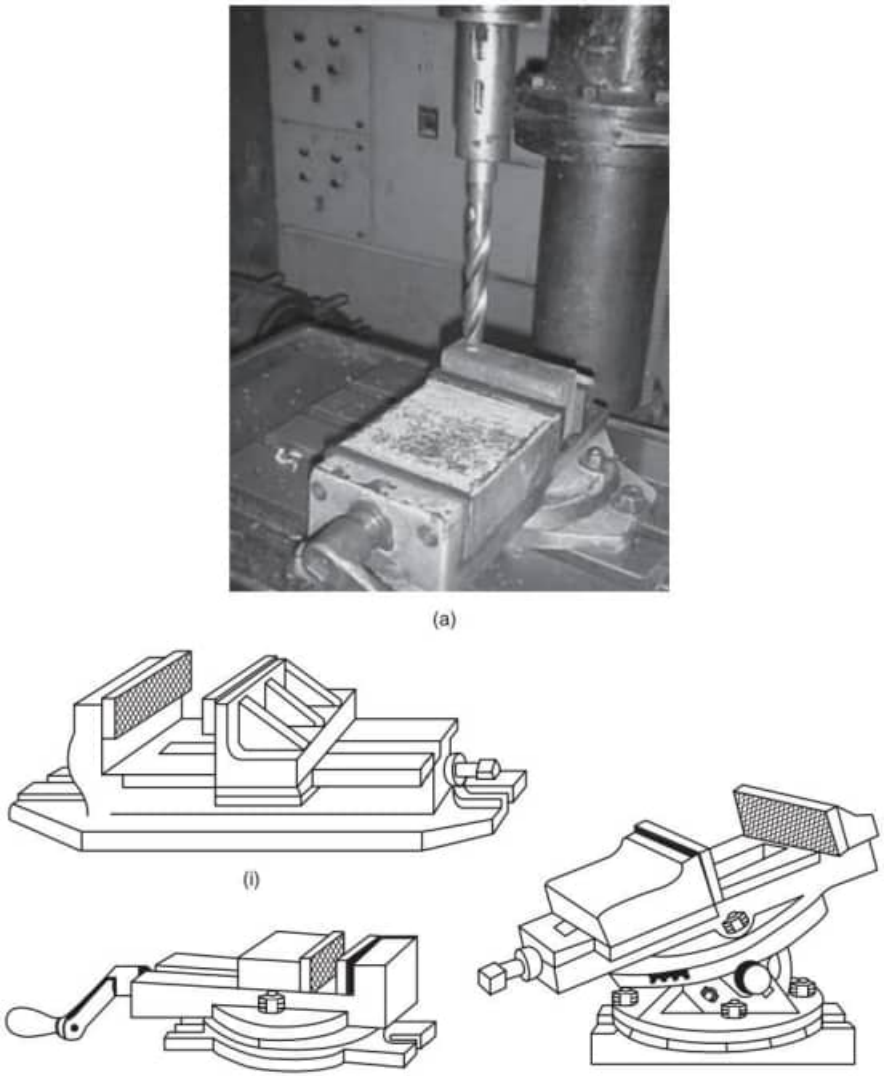

(a) Job and tool in a drilling machine; (b) vices

Mounting a Job in a Drill Jig

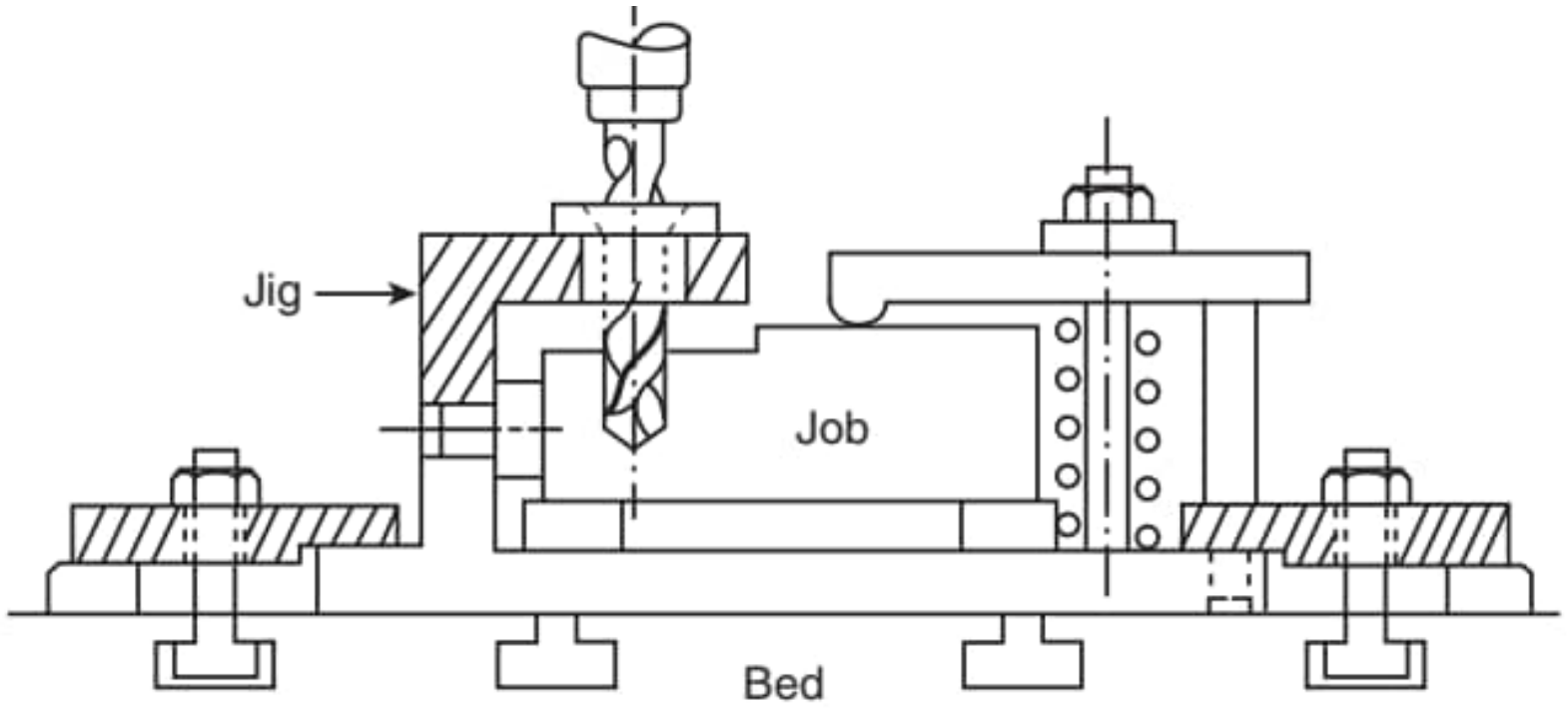

Job in a jig clamped on the drill bed

- The **jig** locates and clamps the job, and guides the drill.
- The jig is clamped on the drill bed with **clamp plates and T-bolts**.
- Used for drilling in **batch production**.

This is for educational purpose only.

Tool Mounting in Drilling Machines

- **Small straight-shank drills** (HSS, carbide): held in a **drill chuck** fitted in the spindle taper bore.
- **Larger taper-shank drills**: fitted directly in the spindle.
- **Sockets** fit a smaller taper shank into a larger spindle bore.

Carbide drills

1. **Solid carbide**, two helical flutes ($\phi \leq 6$ mm)
2. **Carbide tips** brazed in a steel shank (spade and lug drills, ϕ 6–12 mm)
3. **Carbide inserts** clamped in a straight or helically fluted shank

- Insert drills have a **taper shank** (spindle or socket) or a **straight shank** (collet or drill chuck).

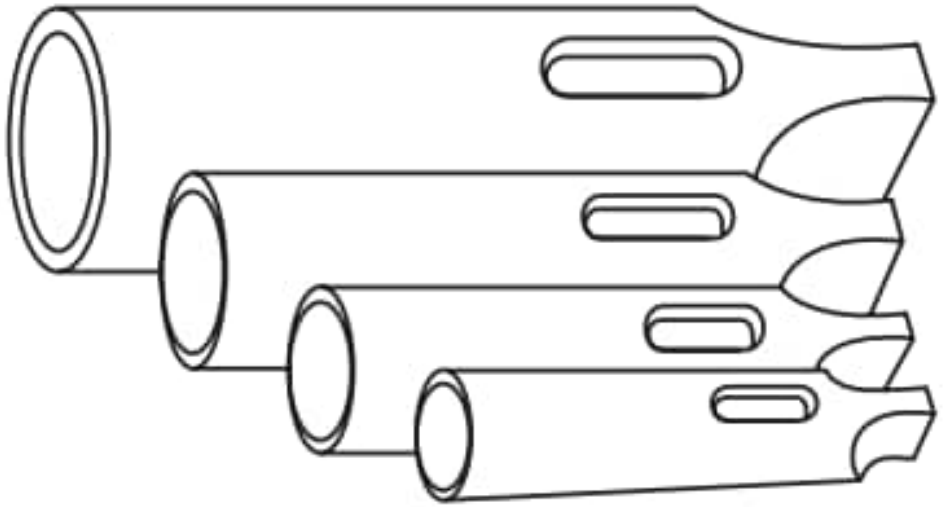

Drill sockets



Drills with carbide inserts

Prepared By:
Dr. S.R. Parim...
Dr. A.K. Pattanaik

Job and Tool Mounting in Shaping Machines

Job mounting (small and medium jobs)

1. Large, odd-shaped blanks **clamped directly** on the bed with clamps, supports and **T-bolts**
2. Small blanks gripped in a **vice**, located on **parallel blocks or Vee-blocks**
3. Blanks held in a **fixture** for batch production

Tool mounting

- Only **single-point tools**, one at a time.
- The shank tool is fitted directly in the **clapper box**, or in a tool holder fitted in the clapper box.

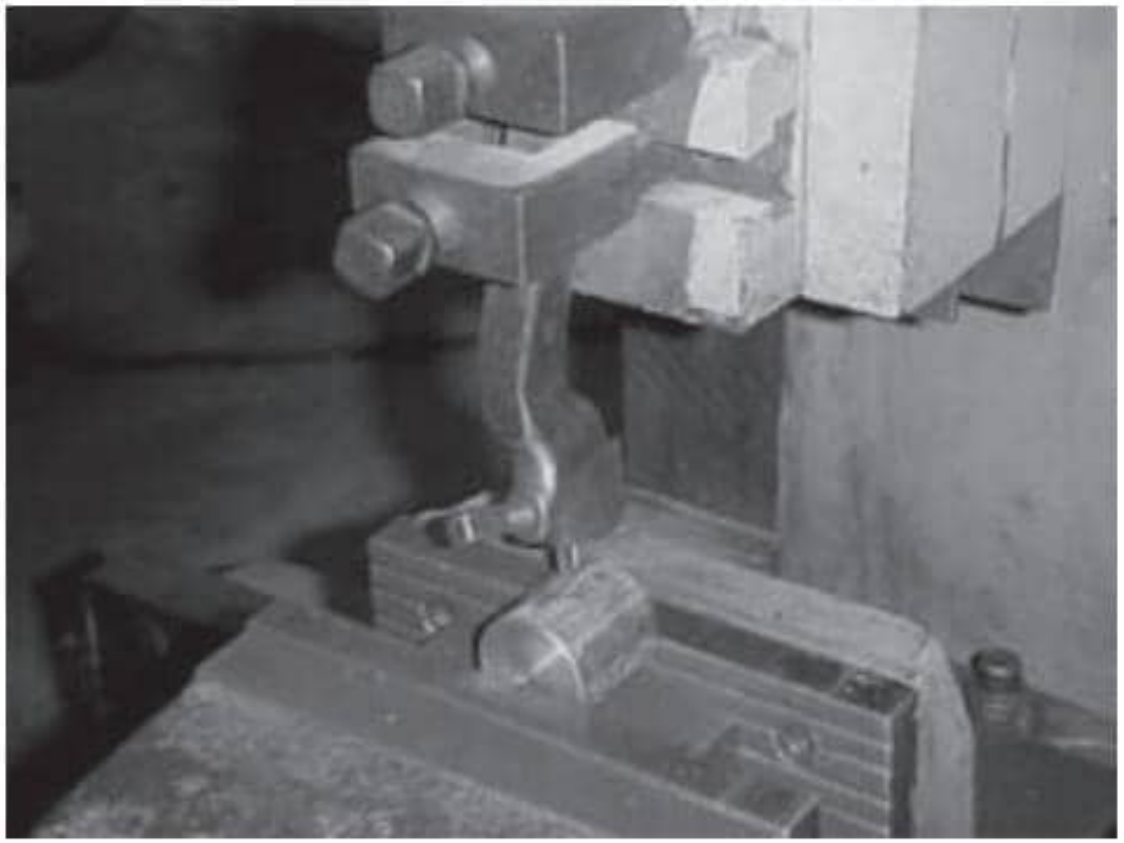

Job and tool in a shaping machine

Prepared B
Dr. S.R. Pa
Dr. A.K.

Job and Tool Mounting in Planing Machines

- Planers machine **large, heavy jobs** with long strokes and high cutting forces.

Job mounting

1. Clamped **directly on the worktable** with clamps, angle plates and T-bolts
2. Rod-like jobs occasionally held **between centres**
3. Held in a **fixture** fixed on the table, for batch production

Tool mounting

- **Single-point tools**, but usually **several at once**, from different planes and angles.

Prepared
Dr. S.R. P
Dr. A.K

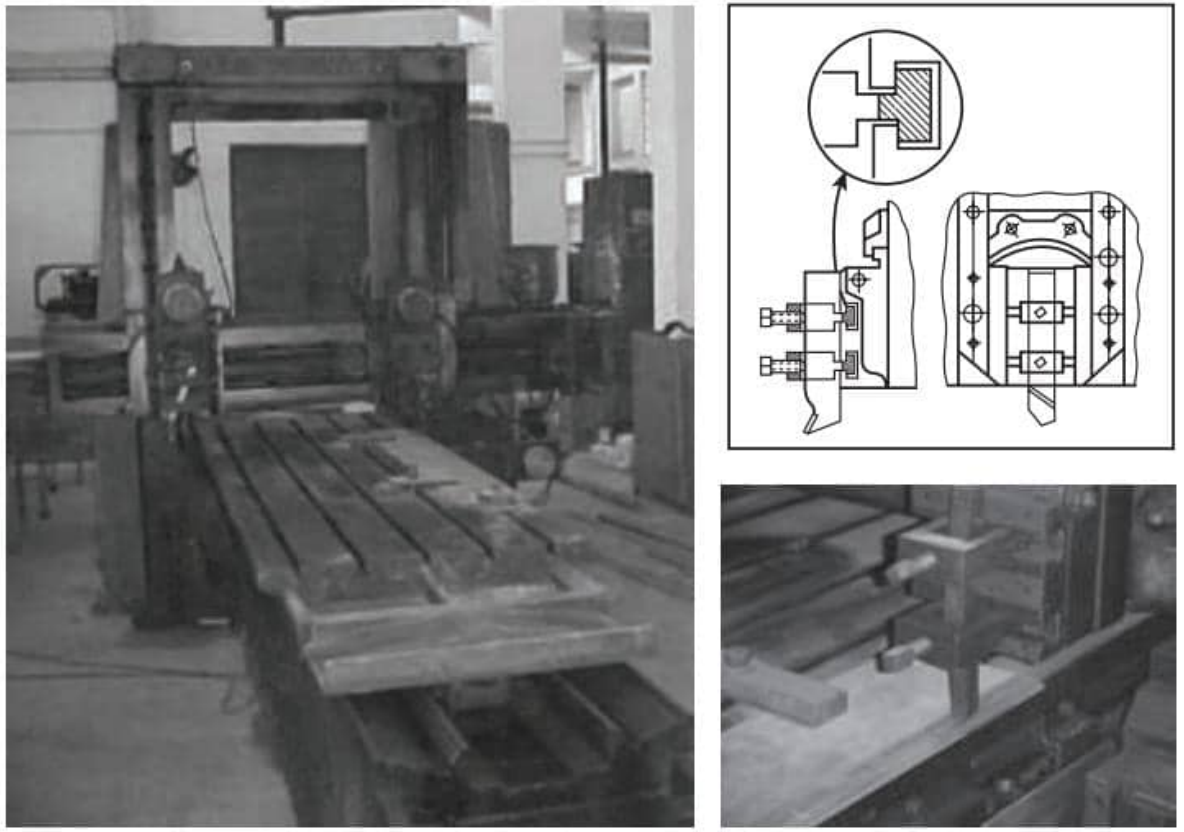

Tool mounting in a planing machine

Job and Tool Mounting in Slotting Machines

- Slotters (vertical shapers) take **light cuts** with one single-point tool.
- The worktable slides along **X and Y**; a **rotary table** sits on top.

Job mounting

1. **Directly on the sliding bed** with clamps
2. On the **rotary table** or in a **chuck**
3. In a **fixture** on the bed or face plate

Tool mounting

- A **single-point tool** is fixed at the lower end of the ram.

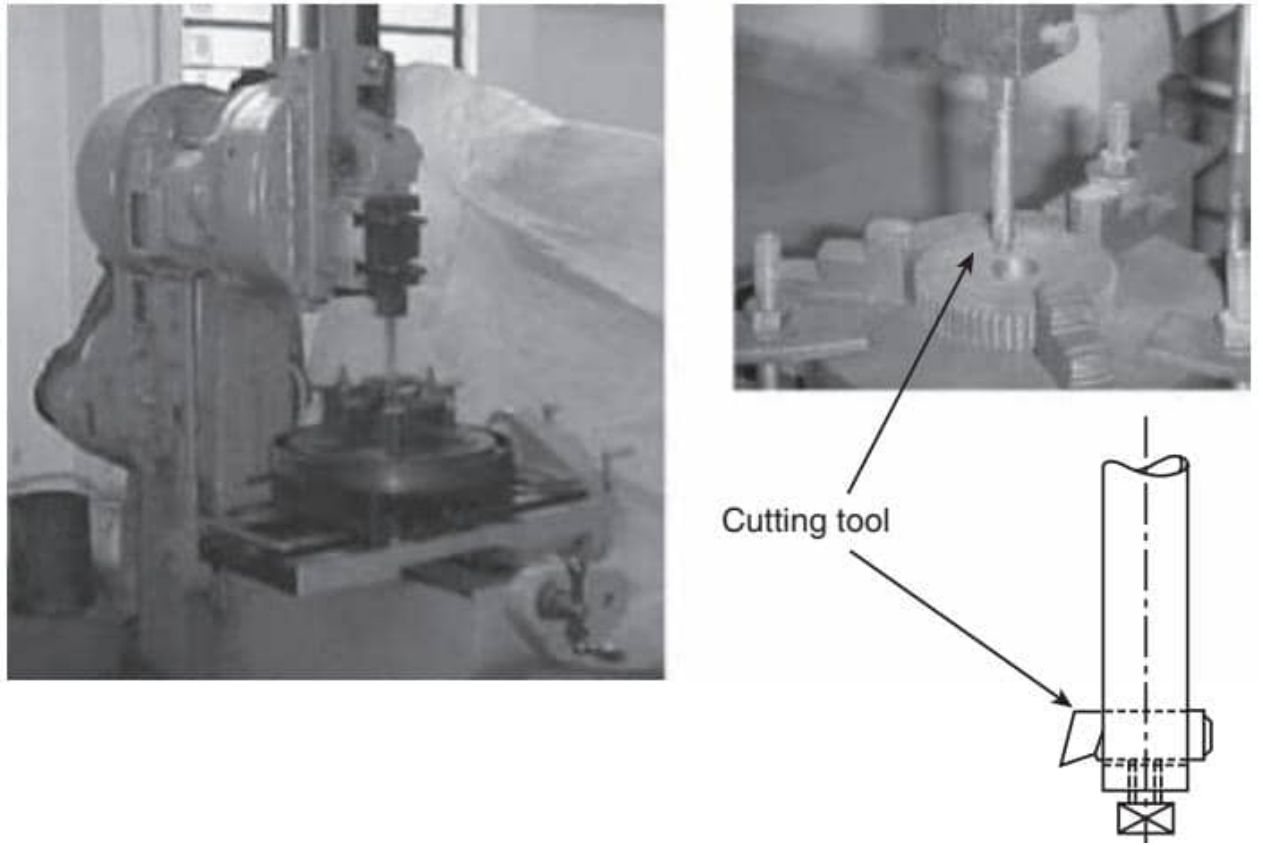

Job and tool in a slotting machine

Dr. S.R
Dr. A

Job Mounting in Milling Machines

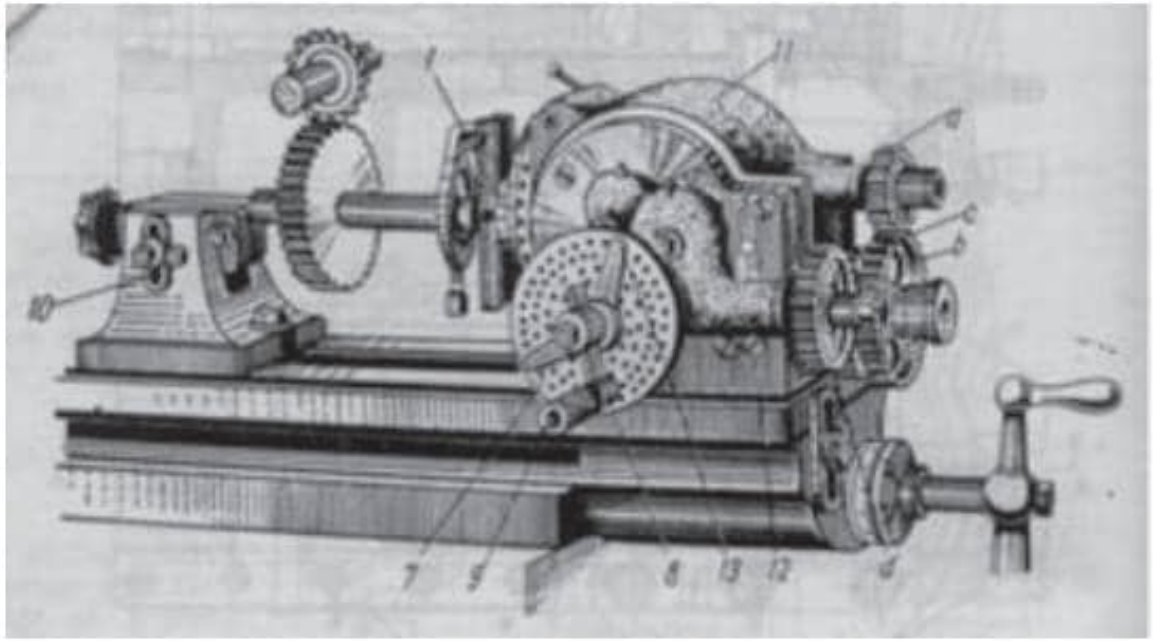

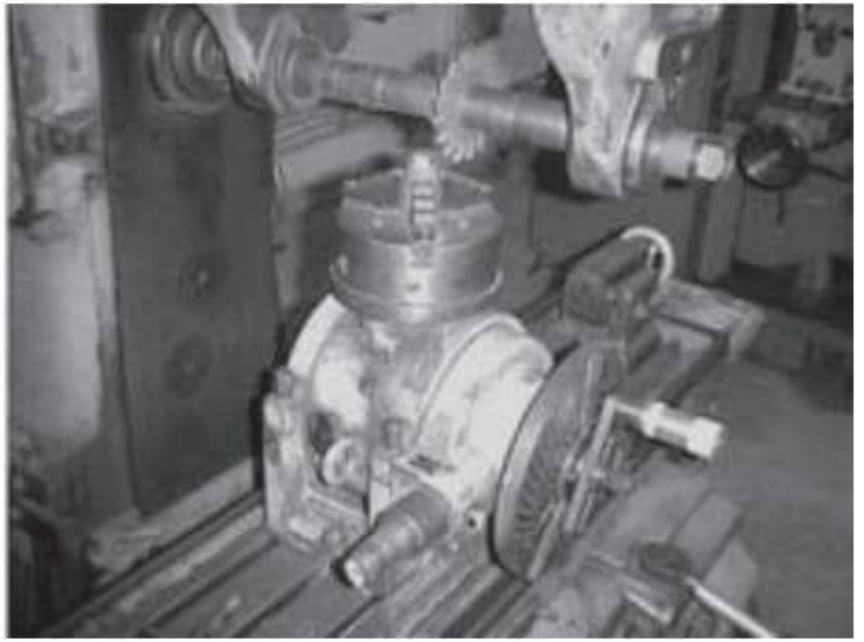

Job mounted on the dividing head

1. Large, irregular jobs **clamped directly** on the table with clamps, supports, Vee-blocks and T-bolts
2. Small geometric components gripped in a **vice** clamped on the table
3. Jobs needing **indexing** (prisms, bolt heads, gears, splines) held in a **dividing head**, directly or on a mandrel
4. Small jobs for batch production held in a **fixture** clamped on the table

Dr. S.R. ... Dr. A.K. Pattanaik

Mounting Cutting Tools in Milling Machines

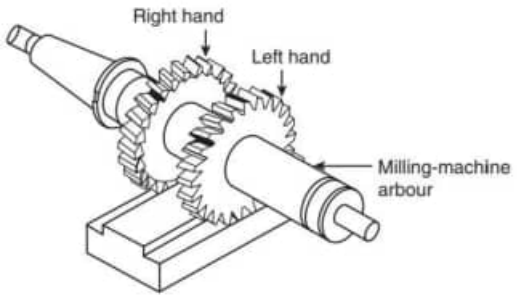

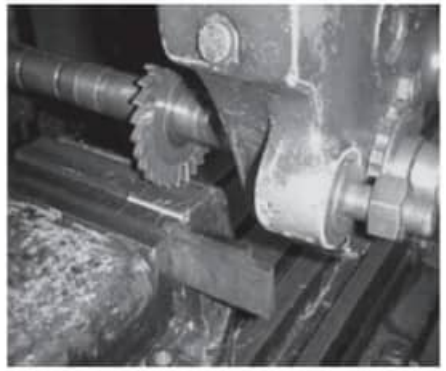

Cutters on a milling arbour

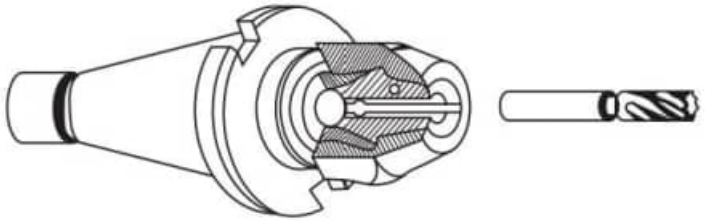

End mill held by a collet

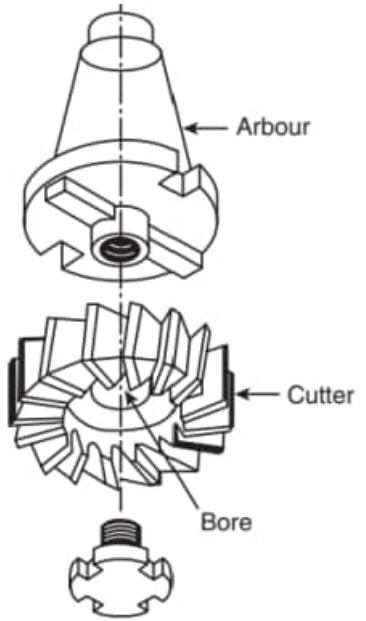

Shell mill on arbour

Prepared by
Dr. S.R. Parimanik
Dr. A.K. Pattanaik

1. **Plain (slab) and disc-type cutters** with a central bore: mounted on a **horizontal milling arbour**
2. **Straight-shank end mills**: held coaxially in the spindle bore by a **collet chuck**
3. **Shell and heavy face mills**: mounted in the hollow spindle on a **short, rugged arbour** with a fastening screw and draw bar

Carbide-Insert Milling Cutters

- **Uncoated or coated carbide inserts** of the required size, shape and number are **mechanically clamped** at the periphery of:
  - plain and disc-type milling cutters
  - large end milling cutters
  - face milling cutters
- **Very small end mills** carry one or two inserts clamped at the tool end.

Prepared By:
Dr. S.R. Pari
Dr. A.K. Pa



Carbide inserts clamped in milling cutters

Job Mounting in Cylindrical Grinding

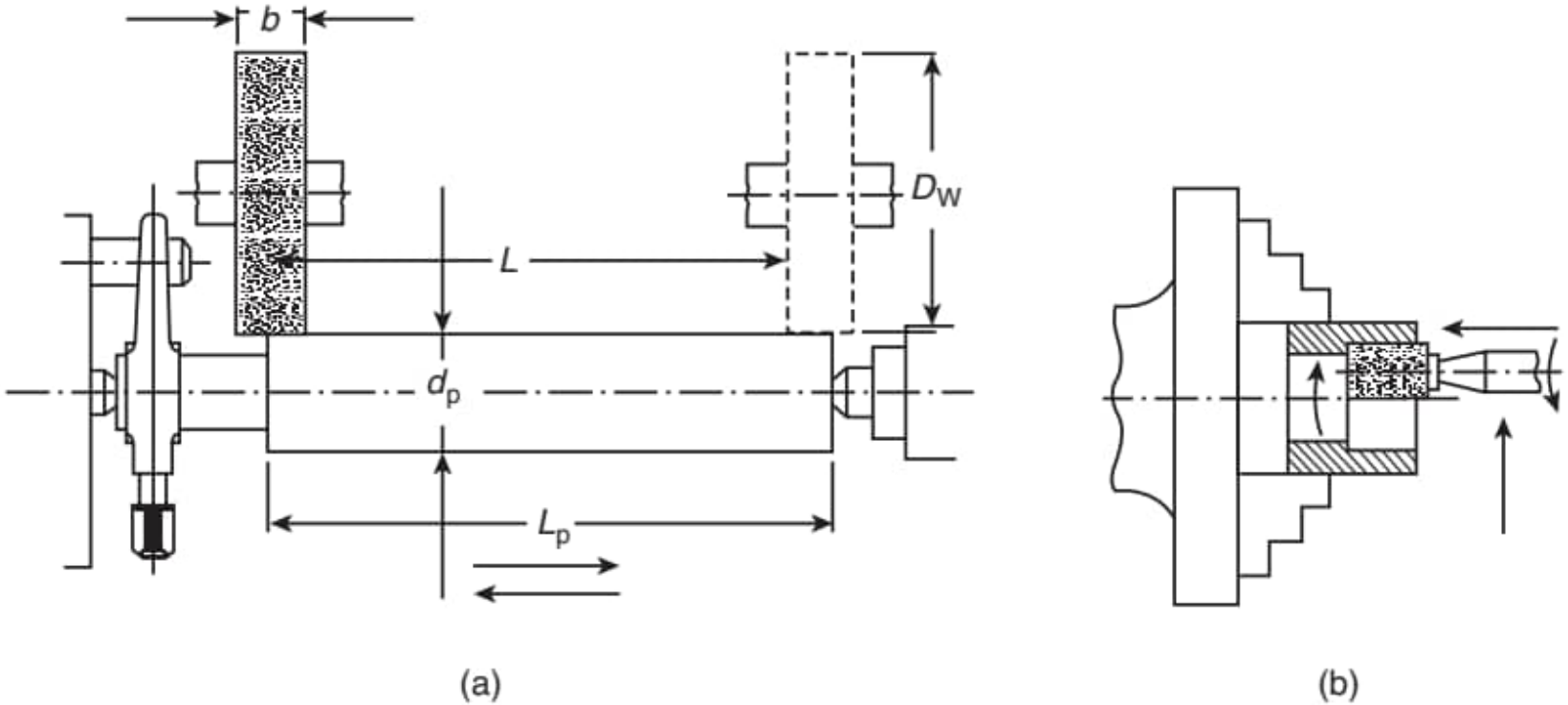

Job mounting: (a) external; (b) internal cylindrical grinding

- The way a job is mounted depends on the **type of grinding process**.
- **External grinding:** the cylindrical job is held **between centres**.
- **Internal grinding:** the job is held in a **chuck**.

This is for educational purpose only.

Job Mounting in Surface Grinding

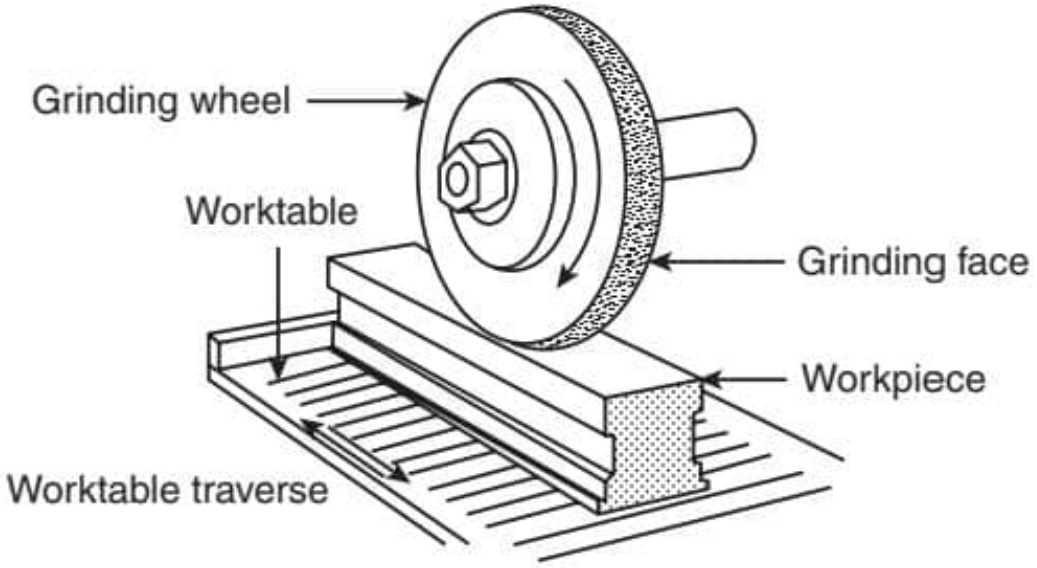

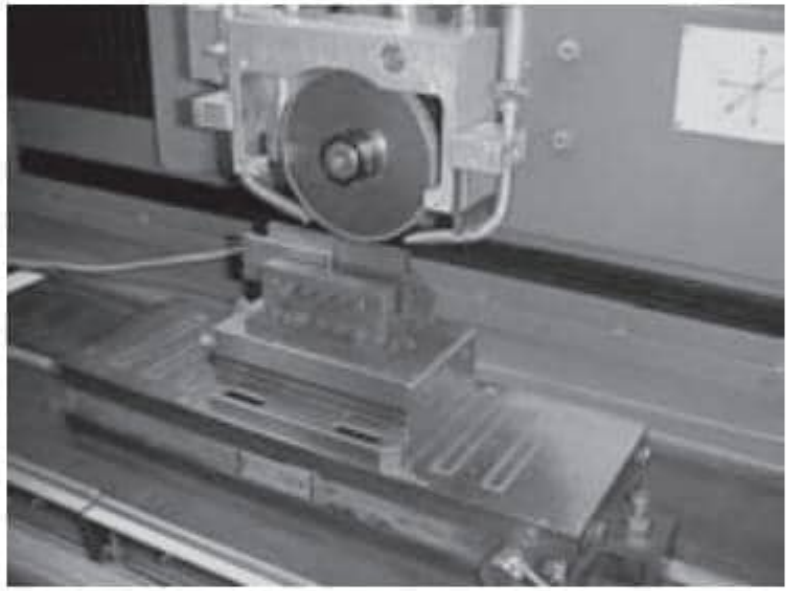

Job on a magnetic chuck in reciprocating surface grinding

In reciprocating surface grinding the job is mounted in four ways:

1. On a **rectangular magnetic chuck** clamped on the table
2. In a **vice** held on the magnetic chuck or clamped on the table
3. **Clamped directly** on the table with clamps and T-bolts
4. In a **fixture** clamped on the table or magnetic chuck

Dr. S.K. Pa
Dr.A.K. Pattana

Batch Surface Grinding and Centreless Grinding

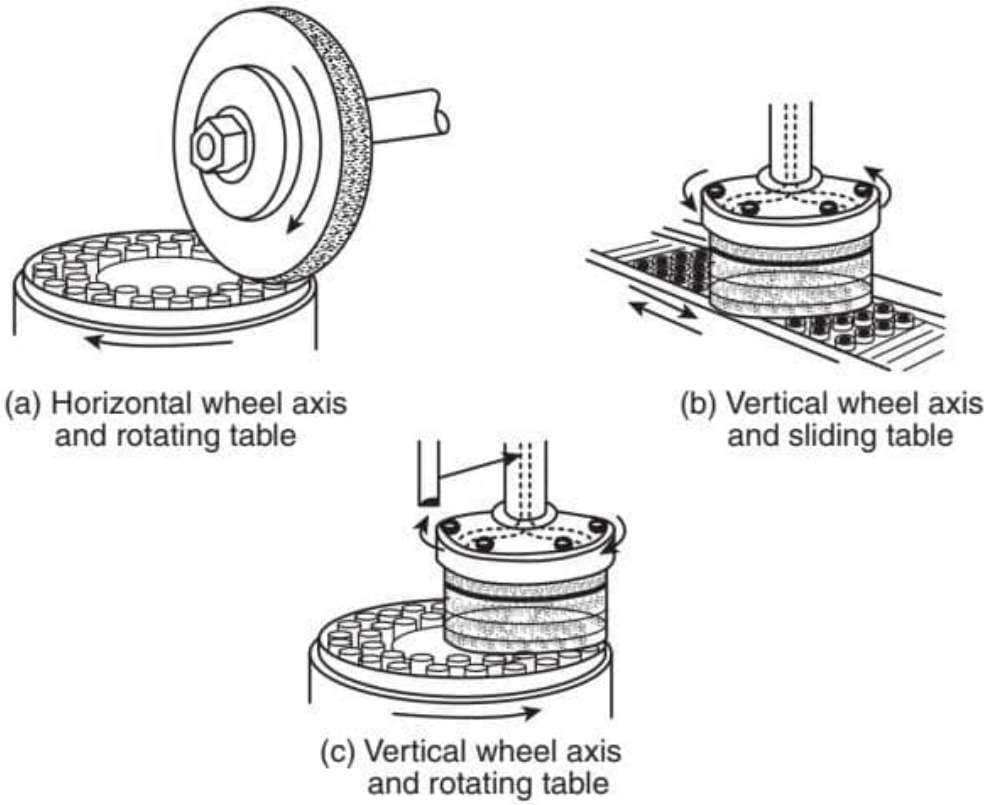

Small jobs in batch surface grinding

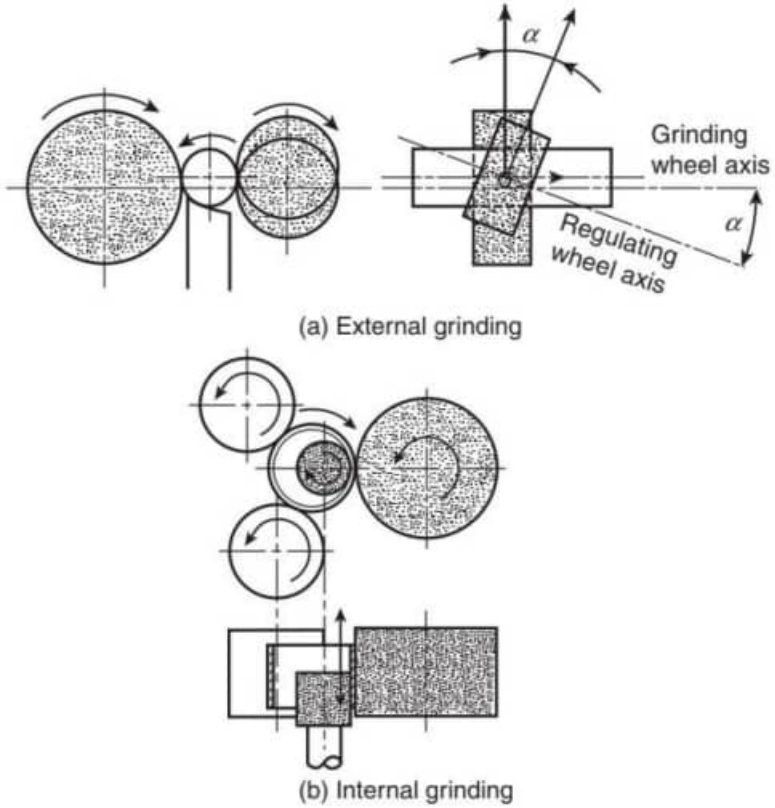

Job mounting in centreless grinding

- **Batch grinding:** many small identical jobs (e.g., bearing races) are laid in an array on a **rotary or reciprocating magnetic table**.
- **Centreless grinding:** a **rest and a regulating (guide) wheel** hold, rotate and feed the job; internal work uses guide and supporting wheels.

This is for educational purpose only.

Mounting Grinding Wheels on the Spindle

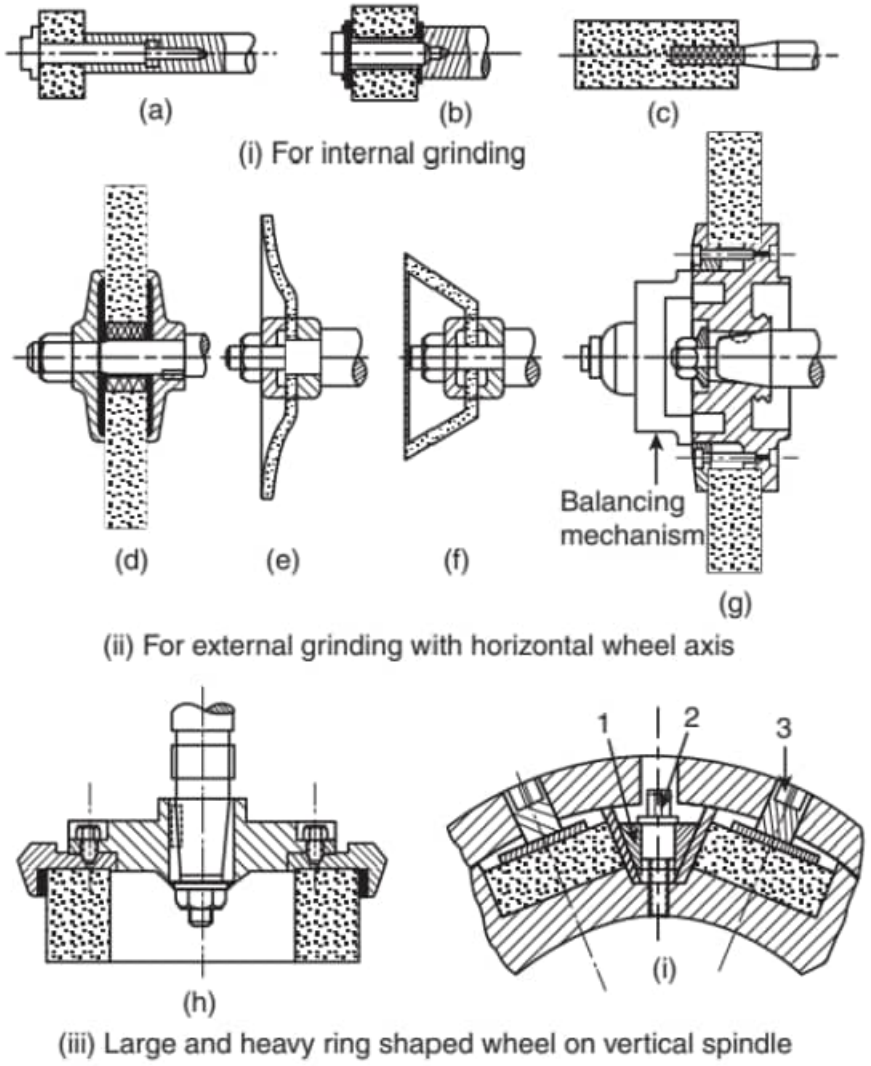

Mounting of grinding wheels on the spindle

- A grinding wheel is always mounted **coaxially on the spindle nose** and rotates only about its own axis.
- The method depends on the wheel's **type, size and shape**:
  - **(i)** small wheels for **internal grinding**
  - **(ii)** wheels for **external grinding** on a horizontal axis; large wheels carry a **balancing mechanism**
  - **(iii)** large, heavy **ring-shaped** wheels on a **vertical spindle**

ed By:
. Parimanik
.K. Pattanaik

Job and Tool Mounting in CNC Machine Tools

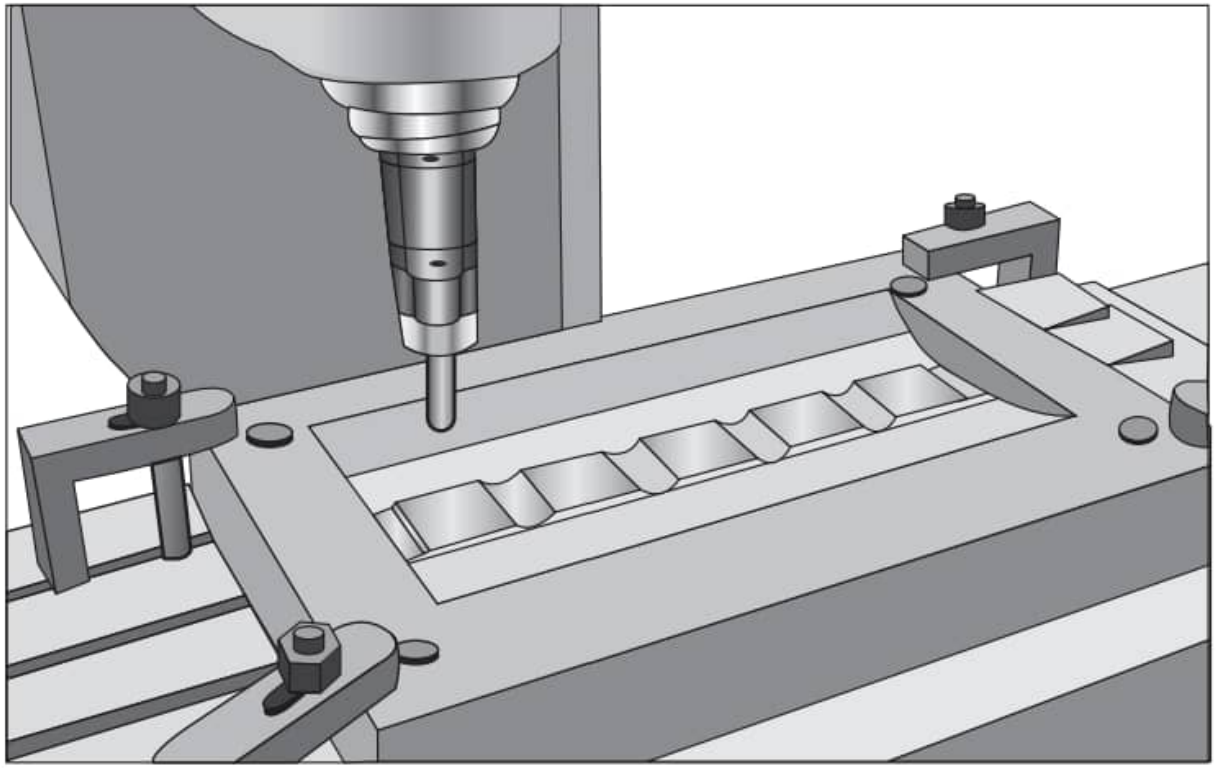

Job clamped on the bed of a CNC milling machine

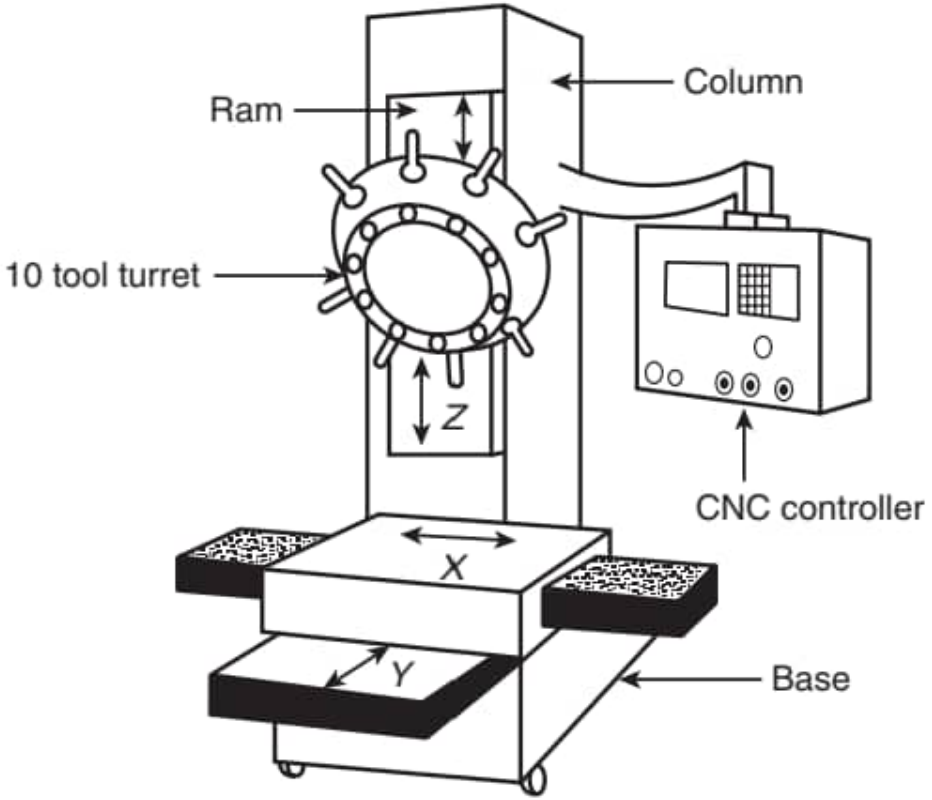

Tool turret in a CNC drilling machine

- **CNC milling:** the job is **clamped on the bed** with clamps and T-bolts.
- **Turret-type CNC drilling:** a **10-tool turret** on the ram indexes the required tool into position under CNC control.

This is for educational purpose only.

Tool Storage and Changing in CNC Machining Centres

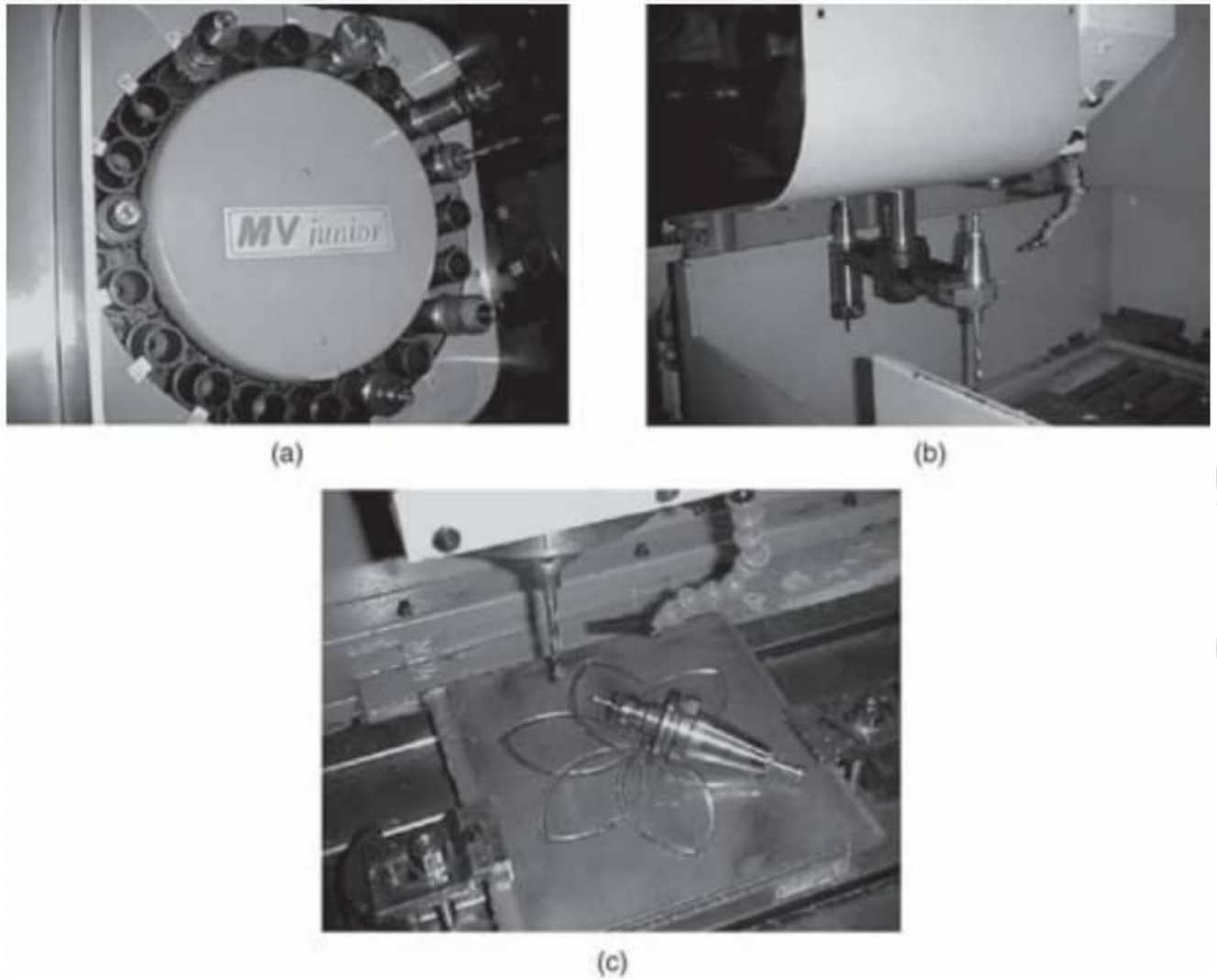

(a) Tool bank; (b) ATC; (c) tool holder

- **Tool bank (magazine):** stores the tools ready for use.
- **Automatic tool changer (ATC):** transfers tools between the tool bank and the spindle.
- **Tool holder:** locates the tool accurately in the spindle.
- Precision CNC machines depend on **quick, accurate tool mounting with rigid clamping**, and on **rigid, correctly positioned blanks**.

This is for educational purpose only.

Summary: Job and Tool Holding by Machine Tool

Machine tool	Job holding	Tool holding
Centre lathe	3-jaw and 4-jaw chucks, face plate, centres, chuck and centre, steady and follower rests	Tool post, insert tool holders, tailstock quill for drills
Capstan, turret and automatic lathes	Coventry, air-operated, soft-jaw and collet chucks	Front and rear slides, radial slides, hexagonal turret
Drilling machine	Bed clamping, vices, jigs	Drill chuck, taper shank, sockets
Shaper, planer, slotter	Bed or table clamping, vice, fixture, rotary table, chuck	Clapper box (shaper), several tool heads (planer), ram (slotter)
Milling machine	Table clamping, vice, dividing head, fixture	Arbour, collet chuck, shell-mill arbour
Grinding machine	Centres, chuck, magnetic chuck, centreless rest and regulating wheel	Wheel mounted coaxially on the spindle nose
CNC machine tool	Bed clamping, fixtures	Tool turret, tool bank and ATC

Prepared By:
Dr. S.R. Parimanik
Dr. A.K. Pattanaik

Types of Surface Generated

Part B

Contents

1. Basic functions of machine tools
2. Generatrix and Directrix
3. Generation of flat and cylindrical surfaces
4. Tool–work motions
5. G and D in turning, shaping and planing
6. Sources of Generatrix and Directrix
7. Milling, drilling and boring
8. Summary

Prepared By:
Dr. S.R. Parimanik
Dr. A.K. Pattanaik

Basic Functions of Machine Tools

- Preformed blanks are finished by machining to the desired **dimensional accuracy and surface finish**.
- Lathes, drilling, shaping and milling machines produce accurate, well-finished **geometrical surfaces** on the blank. These surfaces are generally **mathematically expressible**.
- Producing them needs proper **relative positioning and motions** of the cutting tool and the workpiece.

Prepared By:
S. Parimanik

Surfaces produced by machine tools

Flat surfaces	Cylindrical surfaces	Contoured surfaces
e.g., shaping, planing, slab milling	e.g., turning, drilling, boring	e.g., form turning, form milling, gear teeth

This is for educational purpose only.

Generatrix and Directrix: Flat Surfaces

- **Generatrix (G):** the line that generates the surface.
- **Directrix (D):** the direction or path along which the Generatrix is traversed.
- A **flat surface** results when a straight line (G) is traversed in a perpendicular direction (D).
- G and D are traced by the **tool tip moving relative to the work surface**.

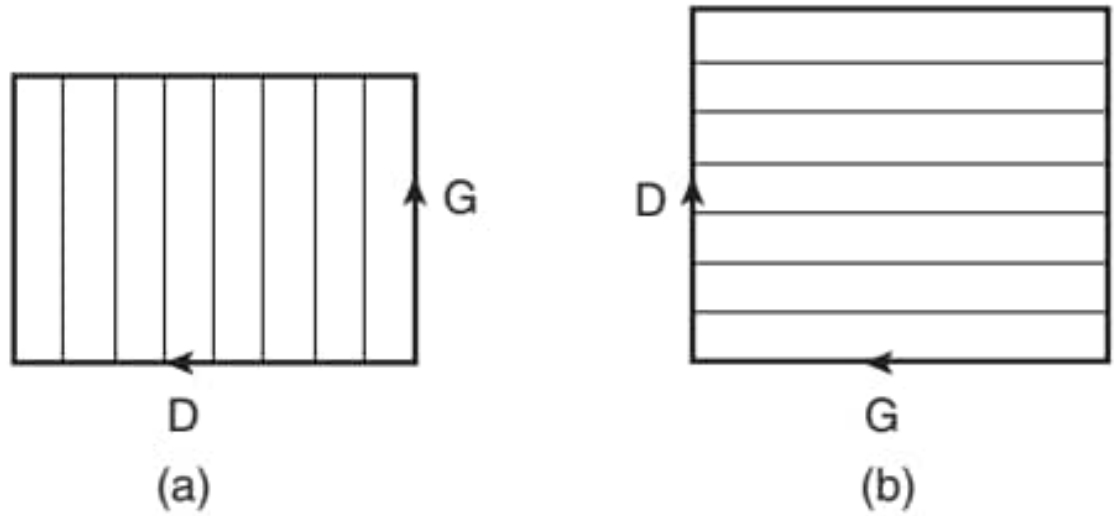

Generation of flat surfaces by G and D

Prepared B
Dr. S.R. Pa
Dr. A.K. P

Generation of Cylindrical Surfaces

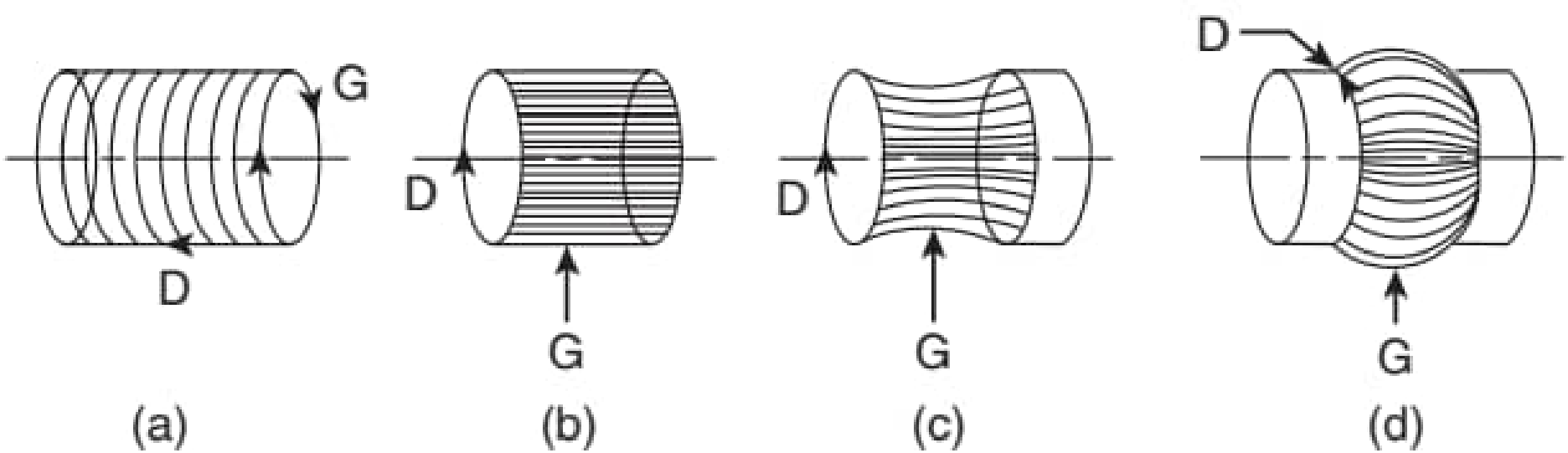

Generation of cylindrical surfaces of revolution

- **(a) Long straight cylinder:** a circle (G) traversed along the axis (D).
- **(b) Short cylinder:** a straight line (G) traversed along a circular path (D).
- **(c), (d) Form cylindrical surfaces:** a curved line (G) traversed along a circular path (D).

Prep
Dr. S.R. Parhi
Dr. A.K. Pattanaik

Tool–Work Motions in Machine Tools

G and D come from the motion of the tool tip relative to the work. These tool–work motions fall into two groups:

1. Formative motions	2. Auxiliary motions
➢ **Cutting motion (CM)**	➢ **Indexing** of work or tool
➢ **Feed motion (FM)**	➢ **Additional feed**, as in a gear shaping machine
	➢ **Relieving motion**, as in a relieving lathe or gear shaper

- G, D, the tool, the work and their motions are interconnected, but in **different ways for different machining work**.
- The next slides show these connections for turning, shaping, planing, milling and drilling.

Dr. S. R. P
Dr. A.K. Pattan

Generatrix and Directrix in Turning

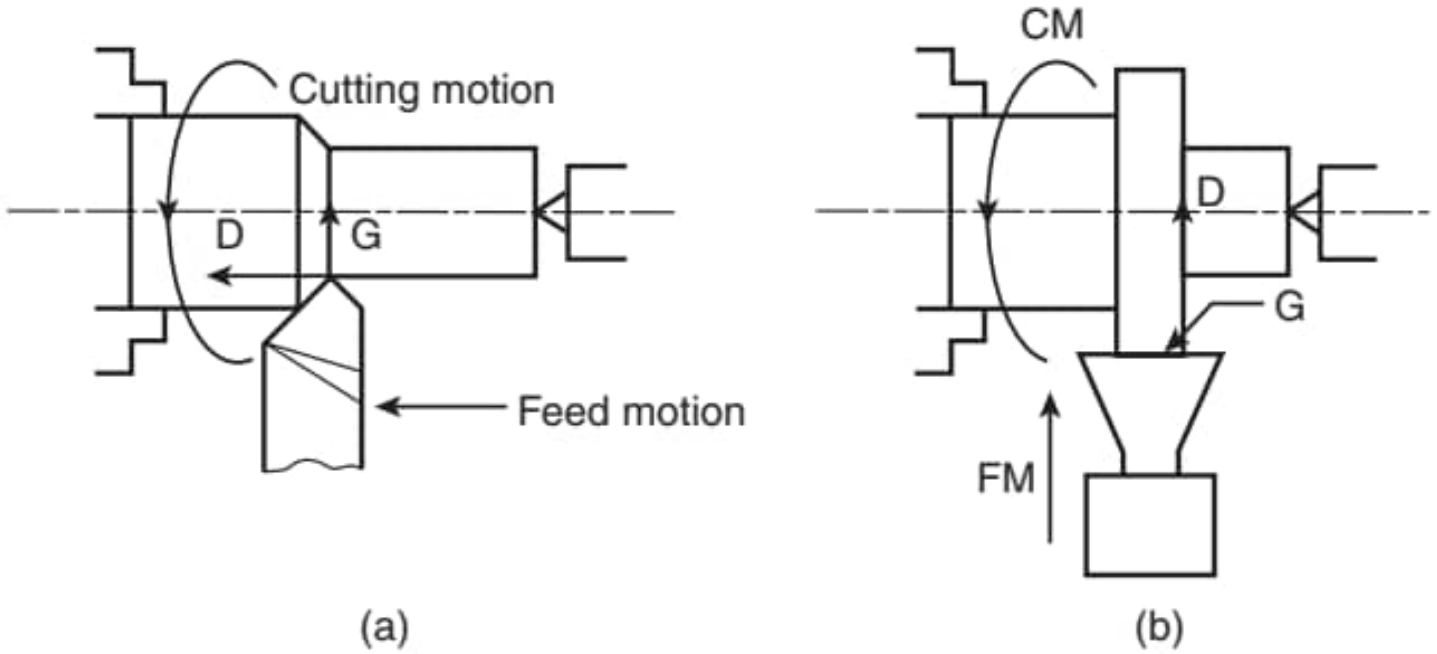

Turning: (a) longitudinal; (b) transverse

In **straight longitudinal turning**:

Connections

G – CM – W
D – FM – T

- The **work rotates** (cutting motion) and gives the Generatrix.
- The **tool feeds** along the axis (feed motion) and gives the Directrix.
- W = work, T = tool.

This is for educational purpose only.

Generatrix and Directrix in Shaping and Planing

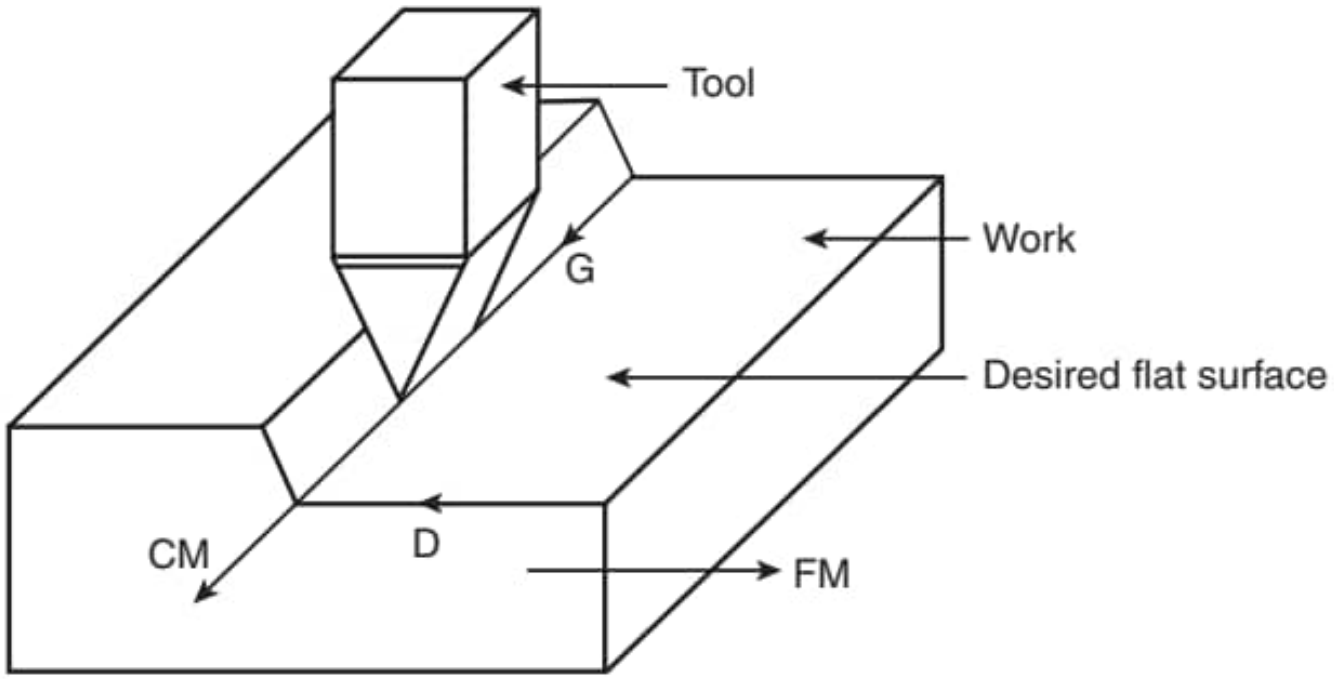

Producing a flat surface in a shaping machine

	Shaping	Planing
G	G – CM – T	G – CM – W
D	D – FM – W	D – FM – T

- **Shaping:** the tool gets the cutting motion; the work gets the feed.
- **Planing** (large jobs): the work gets the cutting motion; the tool gets the feed.

This is for educational purpose only.

Sources of Generatrix and Directrix

Source	How the line is obtained	Example
Tracing (Tr)	Trace or path of a moving point	Turning, shaping
Forming (F)	G is the profile or form of the cutting edge	Form turning
Tangent tracing (TTr)	D is the tangent to the series of paths traced by the cutting edges	Plain milling
Generation (G)	Envelope tangent to the positions of a line or surface rolling on another surface	Gear hobbing, gear shaping

Prepared By:
Dr. S.P. Parimanik
Dr. A.K. Pattanaik

Tangent Tracing and Generation

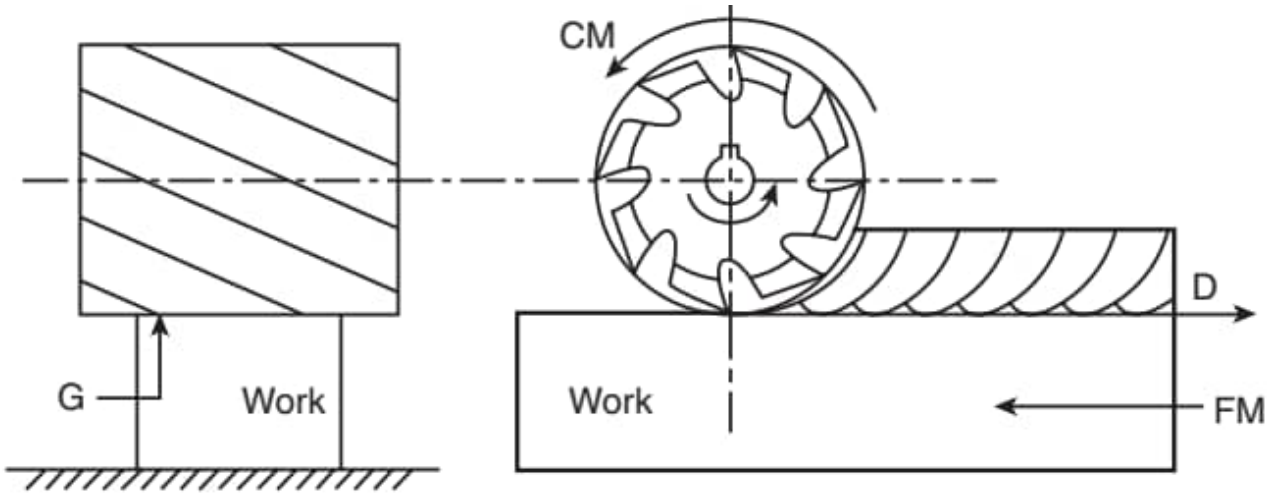

Directrix by tangent tracing in plain milling

- **Plain (slab) milling:** G and D are independent of the cutting motion: **G – x – T – F**, **D – FM – W – TTr**, **CM – T**.
- G is the line of contact between the roller-shaped cutter and the work, so the surface produced is flat.

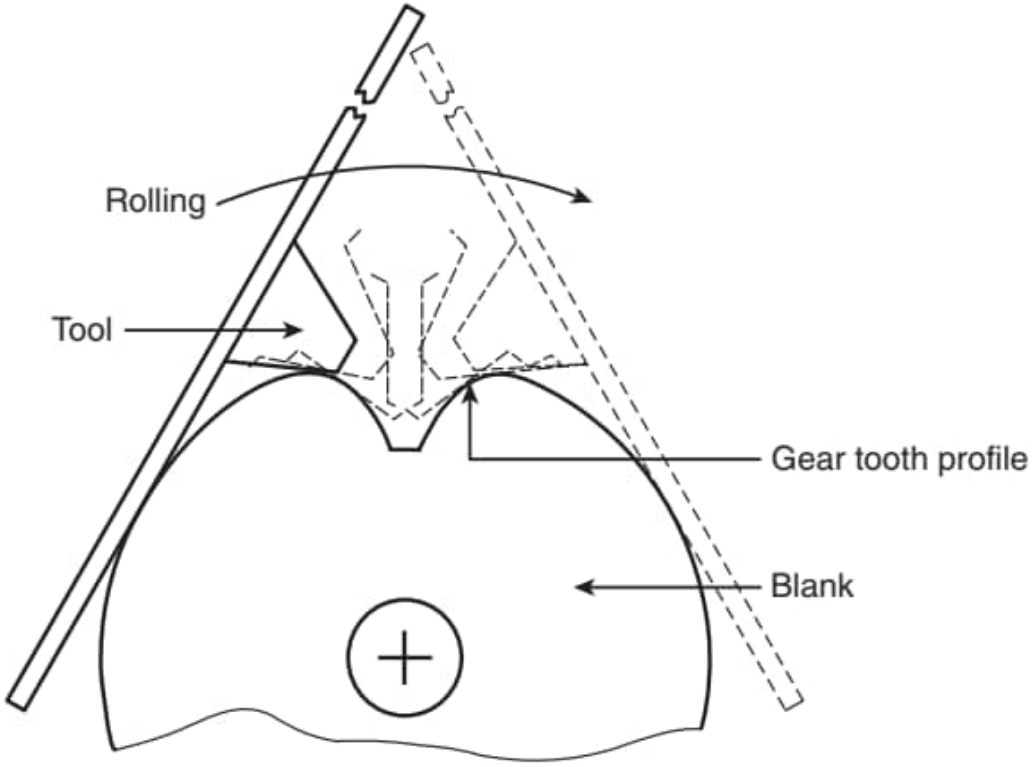

G (or D) in gear cutting by generation

- **Generation:** the tooth profile forms as an envelope while the tool rolls on the blank.

Prepared by: Dr. S.R. Parin Dr. A.K. Pa

Generatrix and Directrix in Form Milling

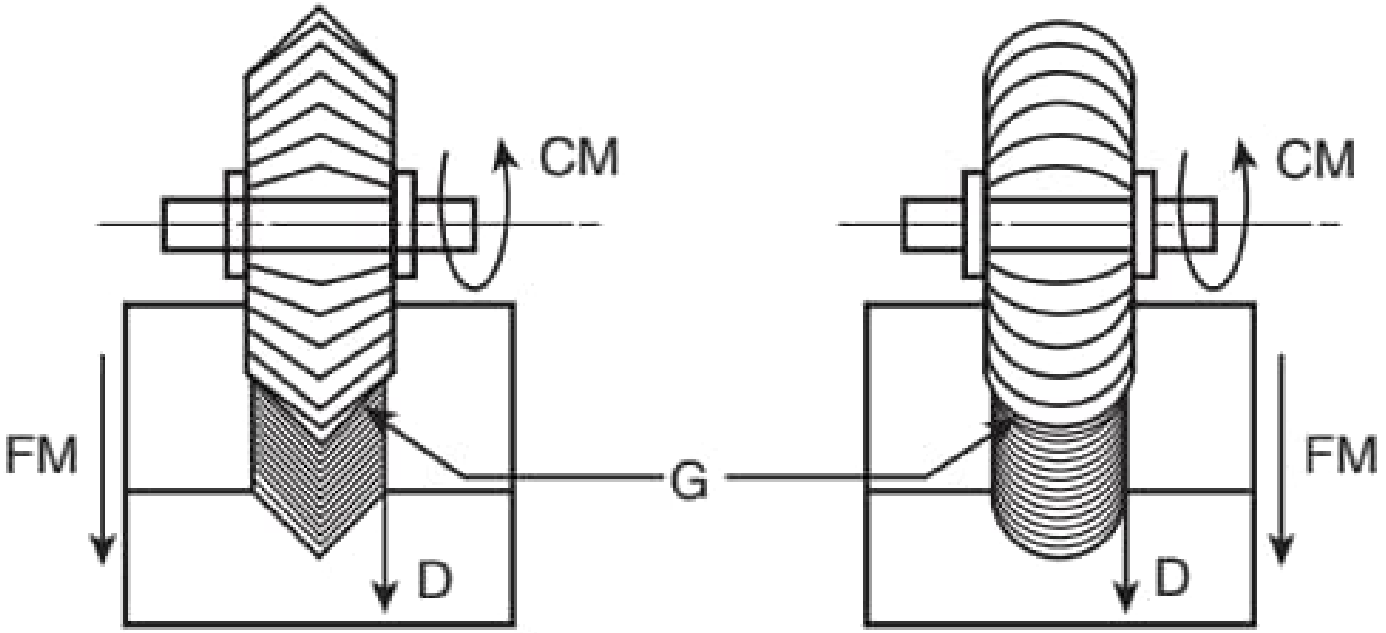

Tool–work motions and G and D in form milling (grooving)

- **Form milling cutters** produce formed surfaces.
- Here the **Generatrix is the tool form** itself.
- The cutter rotates (CM) and the work is fed (FM) to give the Directrix.

This is for educational purpose only.

Generatrix and Directrix in Drilling and Boring

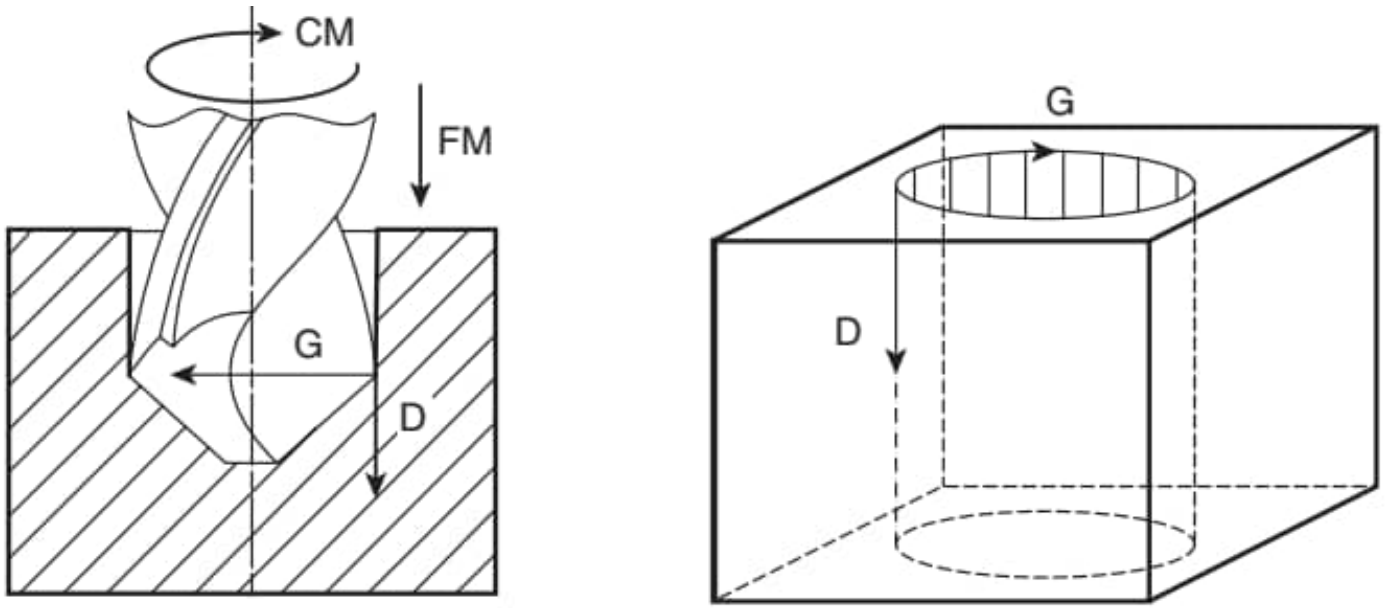

Tool–work motions and G and D in drilling

Drilling connections

G – CM – T – Tr
D – FM – T – Tr

- Both cutting and feed motions go to the **drill**; the work stays stationary.

Boring machines

- **Vertical:** low or medium duty, high precision (e.g., jig boring). G and D as in drilling.
- **Horizontal:** medium or heavy duty. The **work is fed** to give D by tracing.

Dr. A.K. Hanik

Summary: Generatrix and Directrix in Common Operations

Operation	Generatrix (G)	Directrix (D)
Longitudinal turning	Cutting motion of work (G – CM – W)	Feed motion of tool (D – FM – T)
Shaping	Cutting motion of tool (G – CM – T)	Feed motion of work (D – FM – W)
Planing	Cutting motion of work (G – CM – W)	Feed motion of tool (D – FM – T)
Plain milling	Line contact of cutter, by forming	Feed of work, by tangent tracing
Form milling	Form of the tool	Feed motion of work
Drilling	Cutting motion of drill, by tracing	Feed motion of drill, by tracing

Prepared By:
Dr. S.R. Parhmanik
Dr. A.K. Pattanaik

Production Machine Tools

Part C

Contents

1. Semi-automatic lathes: features
2. Capstan and turret lathes vs centre lathes
3. Capstan lathe and turret lathe configurations
4. Capstan vs turret lathe
5. Vertical turret lathes
6. Multiple spindle vertical turret lathes
7. Parallel, progressive and continuous types
8. Copying and relieving lathes

Prepared By:
Dr. S.R. Parimanik
Dr. A.K. Pattanaik

This is for educational purpose only.

Semi-Automatic Lathes

Characteristic features

1. **Auxiliary motions and handling** (bar feeding, speed change, tool change) are done quickly and consistently, with less human effort.
2. Operators need **less skill**, effort and attention.
3. Suitable for **batch or small lot production**.
4. **Costlier** than centre lathes of the same capacity (power).

Capstan and turret lathes vs centre lathe

1. Are **semi-automatic**.
2. Have an **indexable turret** (mostly hexagonal) in place of the tailstock.
3. Hold **many tools**: up to 4 on the front slide, 1 on the rear slide, up to 6 in the turret.
4. Are **more productive**: quick tool engagement, parallel working, faster job mounting.
5. Allow **repetitive production** with preset speed, feed and tool travel.
6. Are **costlier**; economical for **batch or small lot** production.

This is for educational purpose only.

Capstan Lathe: Schematic Configuration

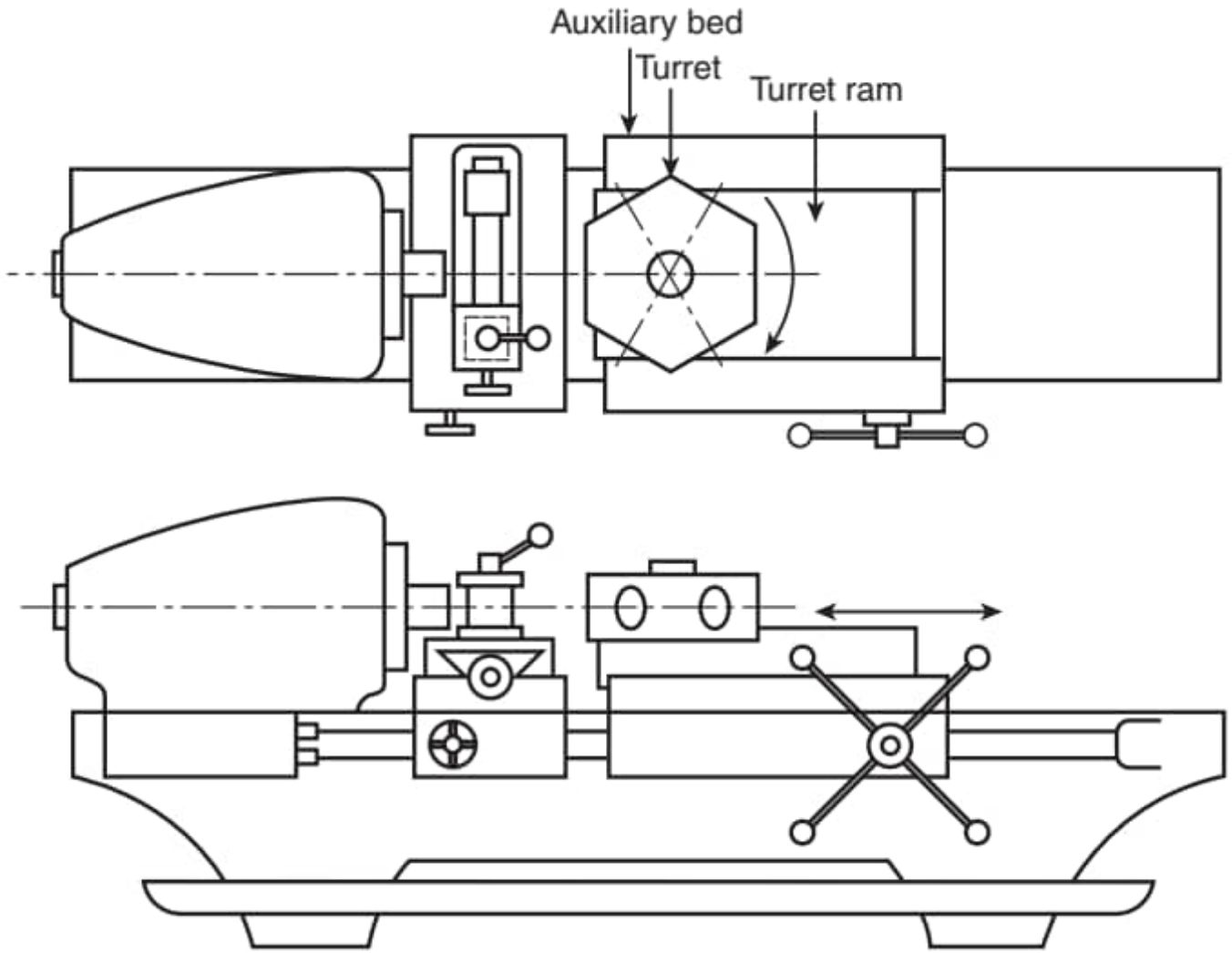

Schematic configuration of capstan lathe

- The **turret** is mounted on a **ram** that slides within an **auxiliary bed** (saddle-type guide block).
- The auxiliary bed is **clamped on the main bed**, so the turret has a **limited stroke**.
- Suited to **short or long rod-type blanks** held in a **collet**.
- Usually **single-spindle, horizontal** axis.
- Threads are cut with a **self-opening die** mounted on one face of the turret.

This is for educational purpose only.

Turret Lathe: Schematic Configuration

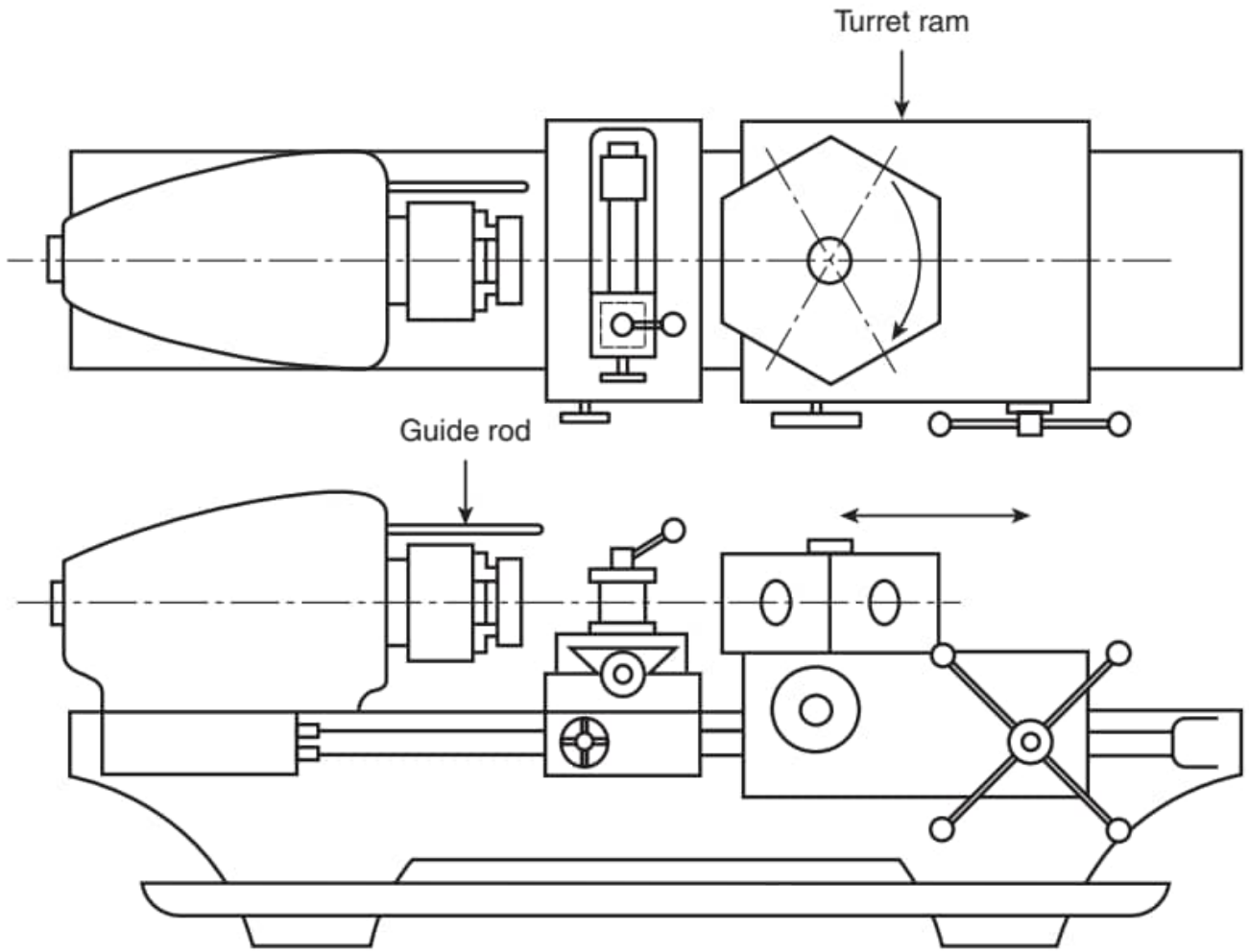

Schematic configuration of turret lathe

- The heavy **turret is mounted on the saddle**, which slides directly on the **main bed**, giving a **longer stroke**.
- A **guide rod (pilot bar)** on the headstock ensures rigid axial travel of the turret head.
- Works mostly on **chucking-type jobs** held in quick-acting chucks.
- **More robust and heavy duty** than a capstan lathe.
- Threads are cut by a **chasing tool** on the front slide, moved by a short leadscrew and half nut.

This is for educational purpose only.

Differences Between Capstan and Turret Lathes

Aspect	Capstan lathe	Turret lathe
Construction	Lighter duty	Relatively more robust and heavy duty
Type of job	Short or long rod-type blanks held in a collet	Mostly chucking-type jobs held in quick-acting chucks
Turret mounting	Turret on a ram in an auxiliary bed clamped on the main bed; limited stroke	Turret on the saddle sliding directly on the main bed; larger stroke
Guide rod	Not provided	Guide rod (pilot bar) on the headstock for rigid turret travel
Thread cutting	Self-opening die on a turret face	Chasing tool on the front slide, moved by a short leadscrew and half nut

Prepared By:
Dr. S.R. Parimanik
Dr. A.K. Pattanaik

Capstan and Horizontal Turret Lathes

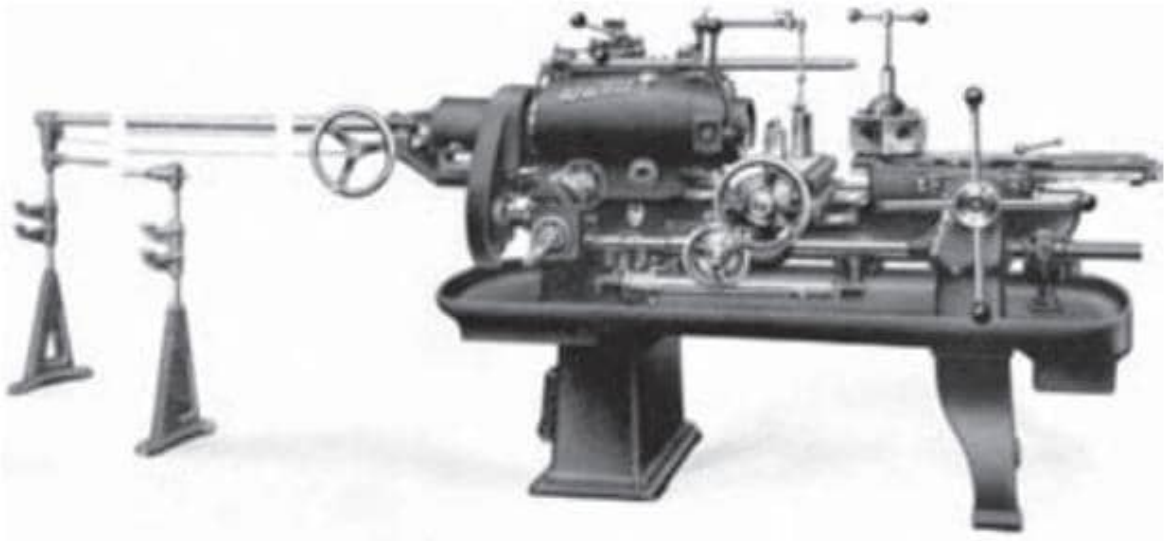

A capstan lathe of common type

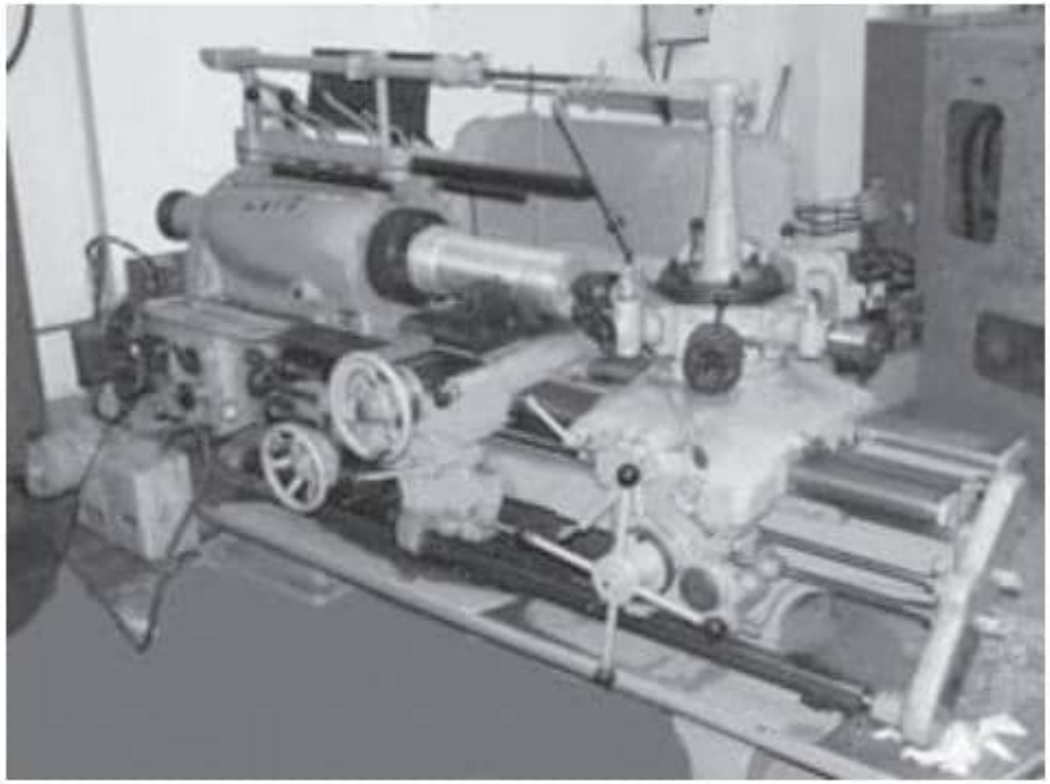

A horizontal turret lathe

- **Capstan lathes** are usually single-spindle with a horizontal axis.
- **Turret lathes** are mostly single-spindle and horizontal, but may also be **vertical** or **multiple spindle** type.

This is for educational purpose only.

Vertical Turret Lathe

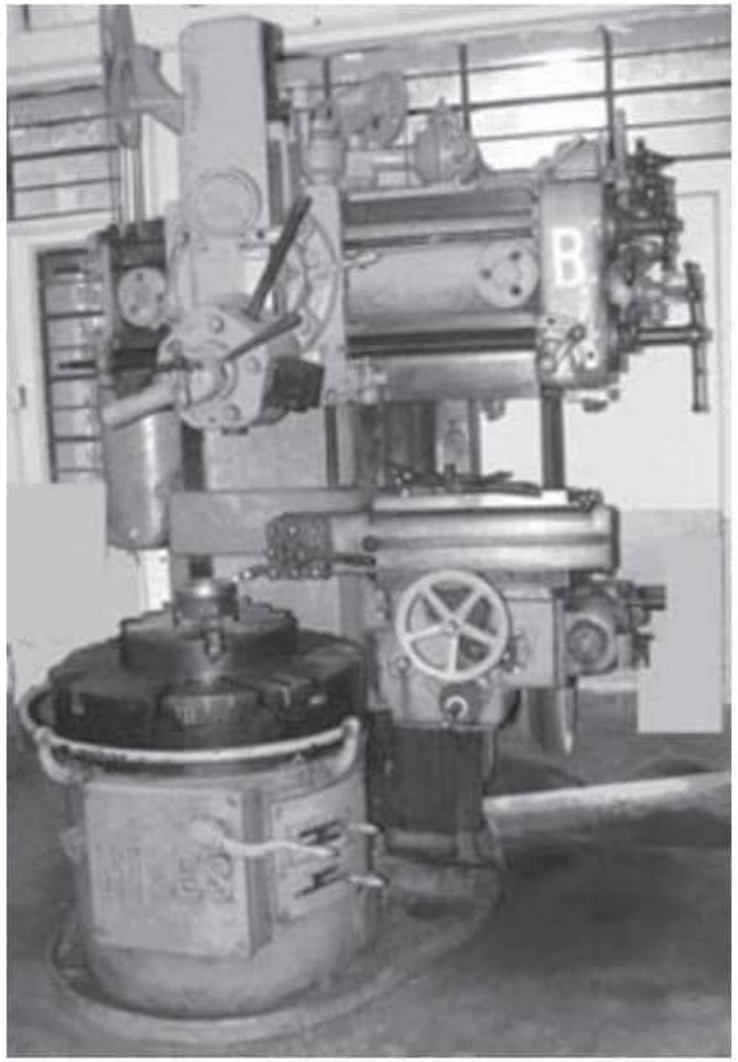

Vertical turret lathe

- Turret lathes may also be built with a **vertical axis**, with the job held on a horizontal rotating table.
- Some productive turret lathes have a **pre-optive drive**: the next work speed is **preset on-line** and engaged instantly, reducing cycle time.

Multiple spindle vertical turret lathes

- Used for **small, chucking-type jobs**, in batches, needing a **limited number of operations**.
- **Vertical axis** gives:
  - less floor space
  - easy loading and unloading
  - no bending load on spindles from job weight
- Have **four to eight spindles**.

Prepared By:
Dr. S.R. Parimanik
Dr. A.K. Pattanaik

Multiple Spindle Vertical Turret Lathe

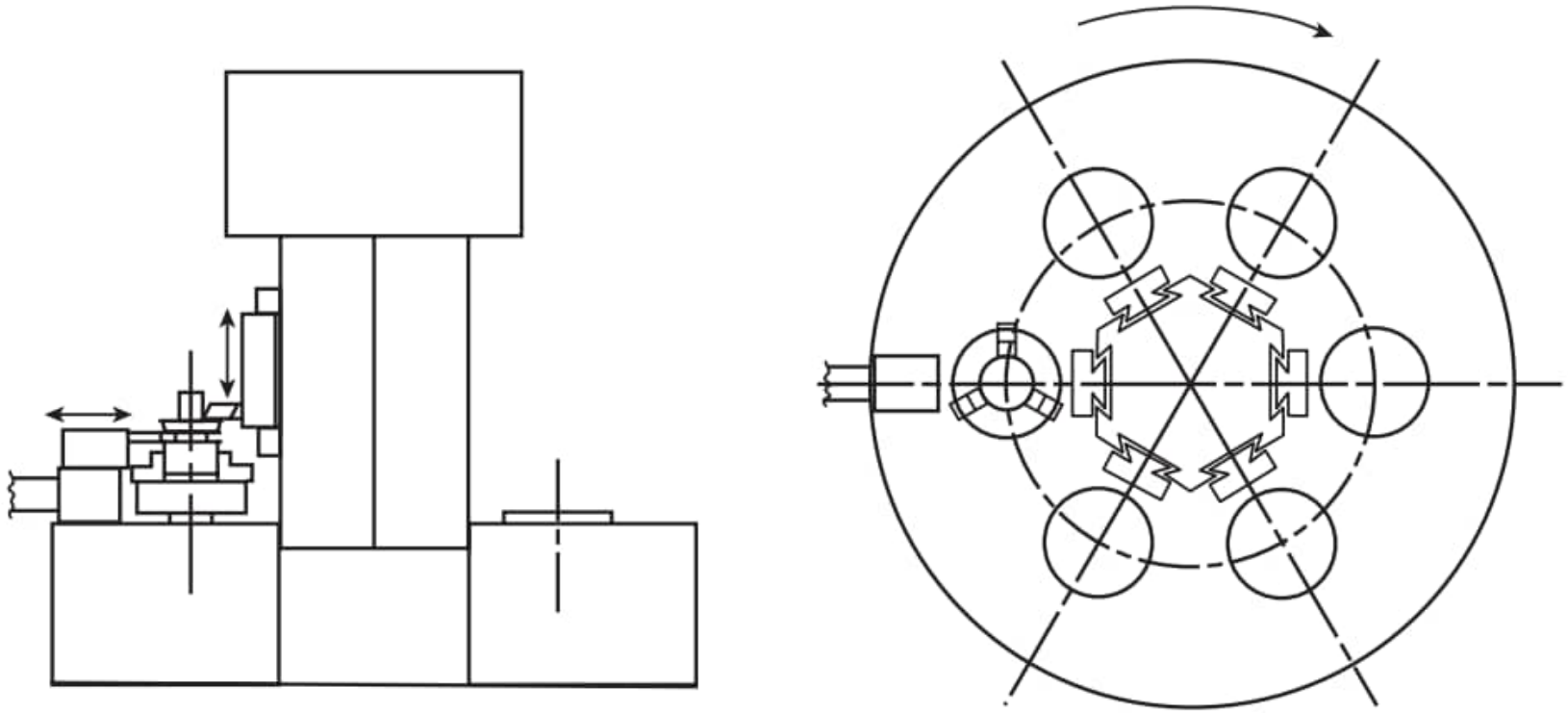

Basic configuration of multiple spindle vertical turret lathe

- Main parts: a large **disc-type spindle carrier** holding several chucked spindles, and a **vertical tool-holding ram** carrying tool slides.
- Tools are fed **axially and radially** at each station; jobs are machined at the stations simultaneously or in sequence.

This is for educational purpose only.

Types of Multiple Spindle Vertical Turret Lathes

Type	Spindle carrier	Working
Parallel processing	Stationary	Only the tool slides move, radially and axially. Identical jobs (say six) are machined simultaneously, each station having the same set of tools.
Progressive processing	Indexed at regular intervals by a Geneva mechanism	Each station does preset work; the blank gets all operations progressively and is unloaded at one station. Suits jobs needing many operations.
Continuous working	Rotates continuously with the tool ram	Each job is finished at the station where it was loaded, by tools fed axially along a ram face. Machine halts only to unload and reload. Suits few, simple operations.

Prepared By
Dr. S.R. Parimanik
Dr. A.K. Pattanaik

Hydraulic Copying Lathe and Relieving Lathe

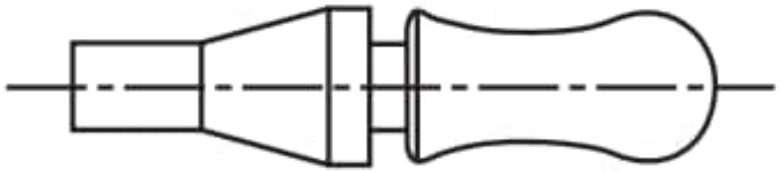

Typical product for copy turning

Hydraulic copying (tracer-controlled) lathe

- Jobs with **steps, tapers and curved profiles** are produced economically in batches.
- A **stylus** moves along a **template** of the job profile; its movement is **hydraulically transmitted** to the tool tip, which replicates the profile.

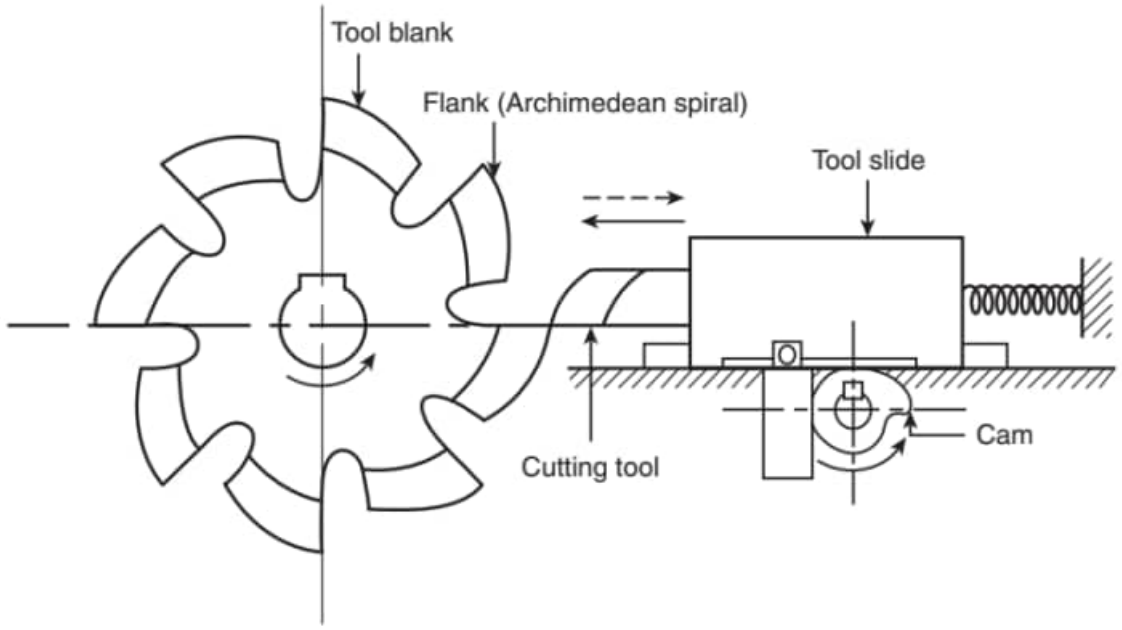

Working principle of relieving lathe

Relieving lathe

- Produces **Archimedean-spiral flanks** on teeth of form milling cutters and gear hobs.
- The tool blank rotates continuously; a **form tool** is fed radially by a **cam** in synchronism.

Prepared by Dr. S.R. P... Dr. A.K. Patta...

Summary: Production Machine Tools

Machine	Key feature	Typical use
Capstan lathe	Turret on a ram in an auxiliary bed; collet work	Bar-type jobs, batch production
Turret lathe	Turret on a saddle on the main bed; guide rod	Heavier chucking jobs, batch production
Vertical turret lathe	Vertical axis; pre-optive drive option	Heavy, short jobs
Multiple spindle vertical turret lathe	4–8 spindles on a disc carrier; parallel, progressive or continuous	Small chucking jobs in batches
Copying and relieving lathes	Template-stylus copying; cam-fed form tool	Stepped and curved profiles; cutter teeth flanks

Prepared By:
Dr. S.R. Parimanik
Dr. A.K. Pattanaik

CNC Machine Tools

Part D

Contents

1. Introduction to CNC machine tools
2. Open and closed loop control; BLU
3. Elements of the control system
4. Coordinate systems and dimensioning
5. Point-to-point and contouring systems
6. Linear and circular interpolation
7. Advantages and construction of CNC
8. Machining centres and turning centres
9. Manual part programming

Prepared By:
Dr. S.R. Parimanik
Dr. A.K. Pattanaik

Introduction to CNC Machine Tools

- Batch production with frequent product changes needs **flexible automation**: changeover must be easy, quick and inexpensive.
- **CNC machine tools** provide this flexibility and are the heart of flexible automation.

Numerical control (NC)

- **Digital control** of tool–work motions and auxiliary functions (tool change, cutting fluid) by a **program** of alphanumeric codes.
- Each motion is commanded as a **number of pulses**; one pulse gives a tiny movement called the **basic length unit (BLU)**, as low as **2–10 µm**.

Computerized numerical control (CNC)

- A **dedicated microcomputer** replaces the hardware controller of NC.
- Control is mostly **software-based**: programs are entered by keyboard, stored, edited and rerun.
- Used for piece, batch and lot production.

This is for educational purpose only.

Basic Working Principle of NC: Open and Closed Loop

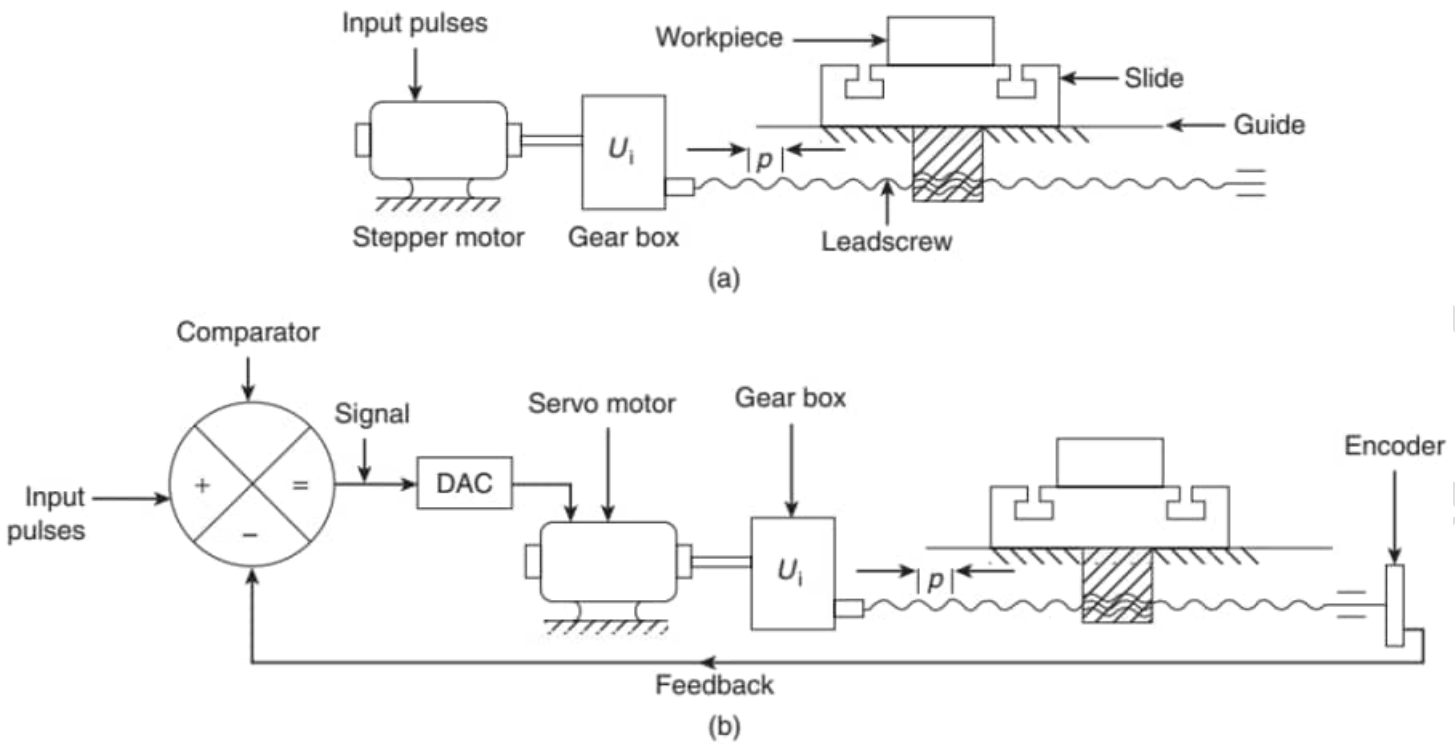

Feed control by NC: (a) open loop, (b) closed loop

NC controls

- Spindle start, stop, speed and direction
- Travel of work or tool: start, end, direction, speed, length
- Cutting fluid on/off and tool change

Open loop (a)

- **Stepper motor** turns by the commanded pulses, **without feedback**.

Closed loop (b)

- An **encoder** on the leadscrew feeds pulses back to a **comparator**.
- The **servo motor** stops when input minus feedback pulses = **0**.

This is for educational purpose only.

Basic Length Unit (BLU) and Number of Pulses

- Each tool–work motion is commanded as a **number of pulses**; one pulse moves the table by one **BLU**.

$$\text{Number of pulses} = \frac{L_t}{\text{BLU}} \qquad \text{BLU} = \psi \cdot U_i \cdot p$$

- **ψ** = angle resolution of the stepper motor or encoder; **Ui** = transmission ratio of the gear box
- **p** = pitch or lead of the leadscrew; **Lt** = desired length of travel

Prepared By: Manik

Worked example

Given: ψ = 1/100 of one rotation, Ui = 1/4, p = 4 mm, Lt = 24.50 mm. Find BLU and the number of pulses.

$$\text{BLU} = \frac{1}{100} \times \frac{1}{4} \times 4 = 0.01 \text{ mm } (10 \text{ µm}) \qquad \text{Number of pulses} = \frac{24.5 \text{ mm}}{0.01 \text{ mm}} = 2450$$

- **Open loop:** the stepper motor turns 2450 steps without confirmation.
- **Closed loop:** the encoder count is compared with the input until the difference is zero.

Elements of an NC System

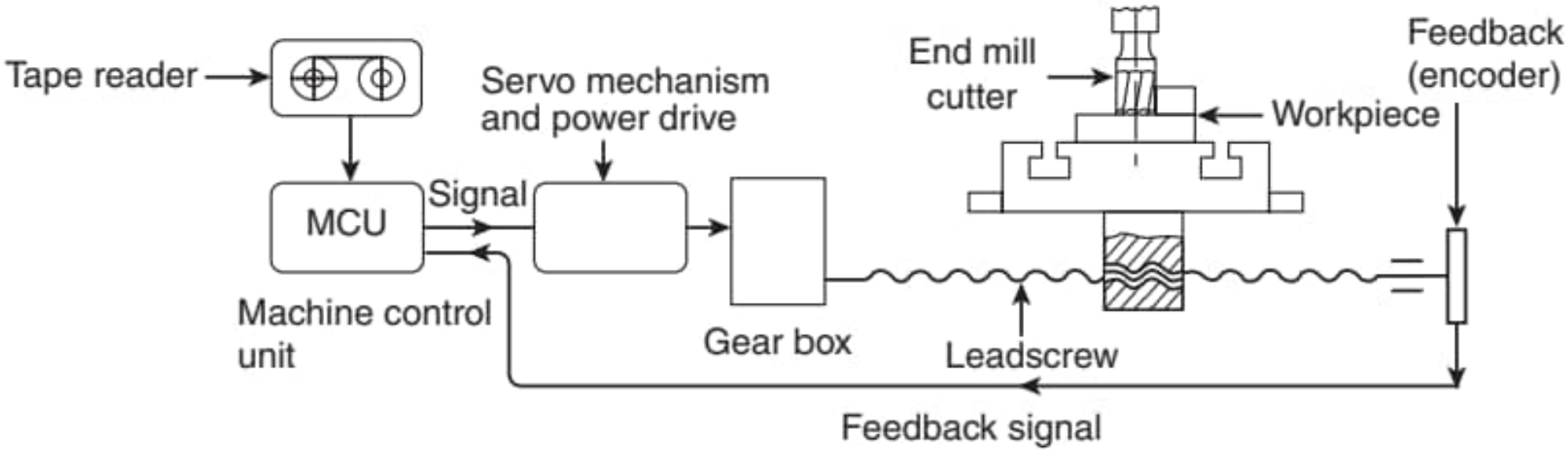

NC system for single-axis travel of a machine tool table

- Each work–tool feed motion is controlled by a **separate NC circuit**. The NC system consists of:

1. **Tape reader** (if input is given through punched tape)
2. **Machine control unit (MCU)**
3. **Servomechanism**
4. **Kinematic chains** for tool or work motions in different axes
5. **Feedback unit**

Dr. S.R. Pattanaik
Dr. A.K. Pattanaik

Tape Reader, MCU, Servomechanism and Feedback Unit

Tape reader

- Part program is stored as **punched holes** in a tape reel.
- Reader may be **electromechanical, optical or electronic**; may be inside the MCU.

Servomechanism

- Applies the **command signals** from the MCU.
- Runs the **driving motor** to move the worktable against the tool as desired.

Machine control unit (MCU)

- **DPU (data processing unit):** decodes instructions, distributes data to axes, holds the **interpolator**; mostly **software**.
- **CLU (control loop unit):** position and velocity loops, auxiliary on/off functions; mostly **hardware**.

Feedback unit

- In closed loop, an **encoder** records actual rotation of the leadscrew as **pulses**.
- Sends them in real time to the MCU for **comparison** with the command pulses.

This is for educational purpose only.

Coordinate Systems in CNC Machine Tools

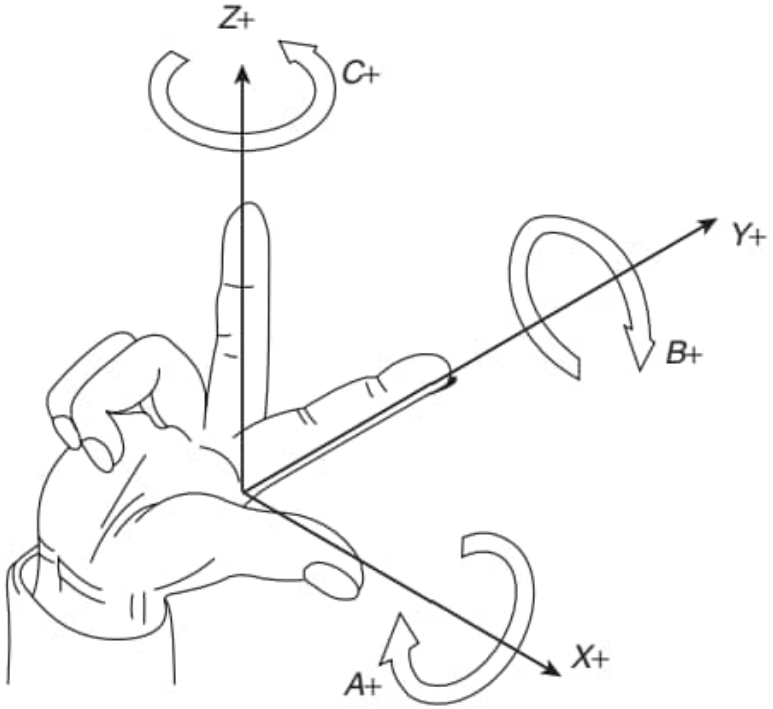

Right-hand coordinate system

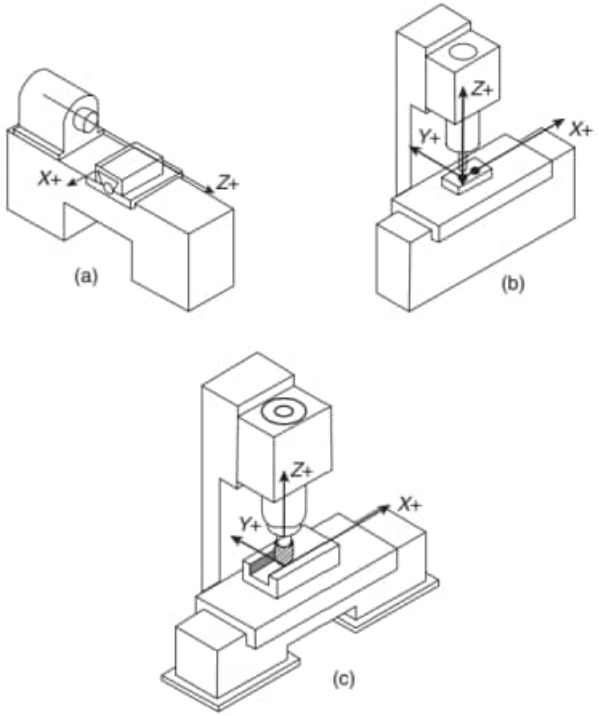

Machine tool axes

- Machines use the **right-hand Cartesian** system.
- **A, B, C** are rotations about X, Y, Z.
- The **Z-axis** is along the **spindle** that rotates the job (lathe) or the tool (milling, drilling, boring).

- **2-D control** (XY plane): turning, drilling, boring, planing, plain and face milling.
- **3-D control** along x, y and z for complex shapes; **four- and five-axis** machines add swivelling of the bed or tilting of the spindle.

This is for educational purpose only.

Dimensioning: Absolute and Incremental Modes

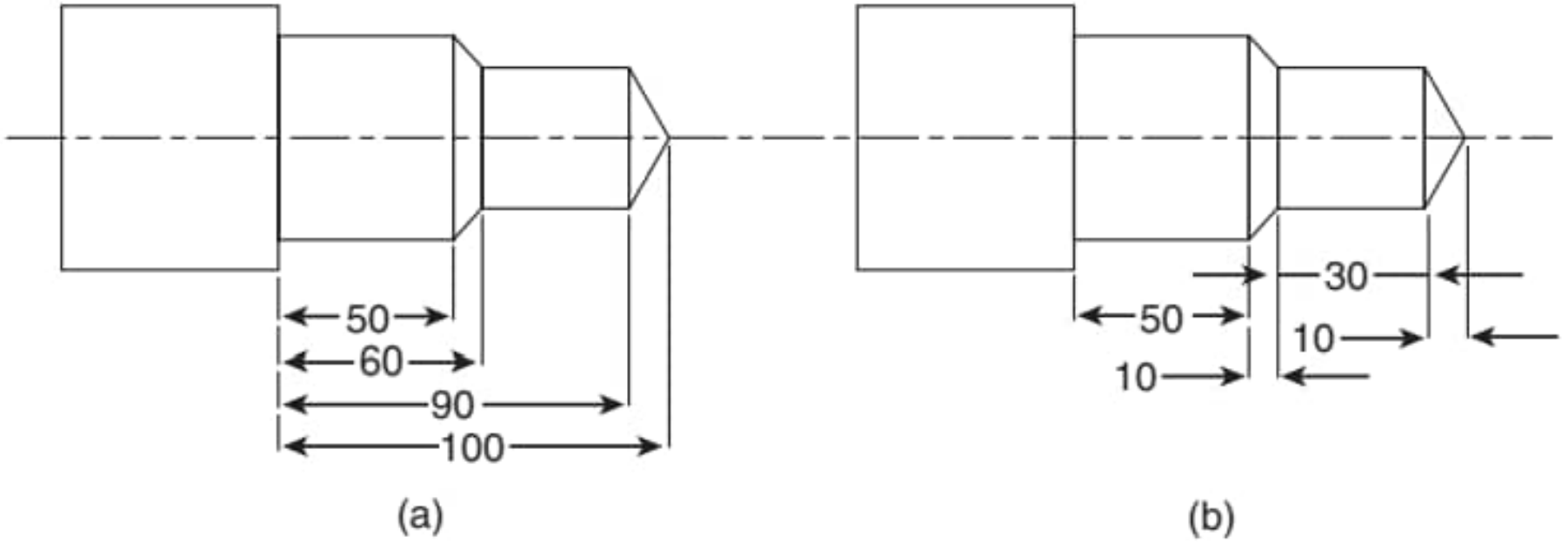

Systems of dimensioning: (a) absolute and (b) incremental

(a) Absolute mode	(b) Incremental mode
➢ All coordinates are given from a **fixed origin**.	➢ Each coordinate is given from the **previous location**.
➢ Steps at **50, 60, 90, 100** from the same datum.	➢ Steps of **50, 10, 30, 10** one after another.

This is for educational purpose only.

Programming Worktable Movement for Drilling Four Holes

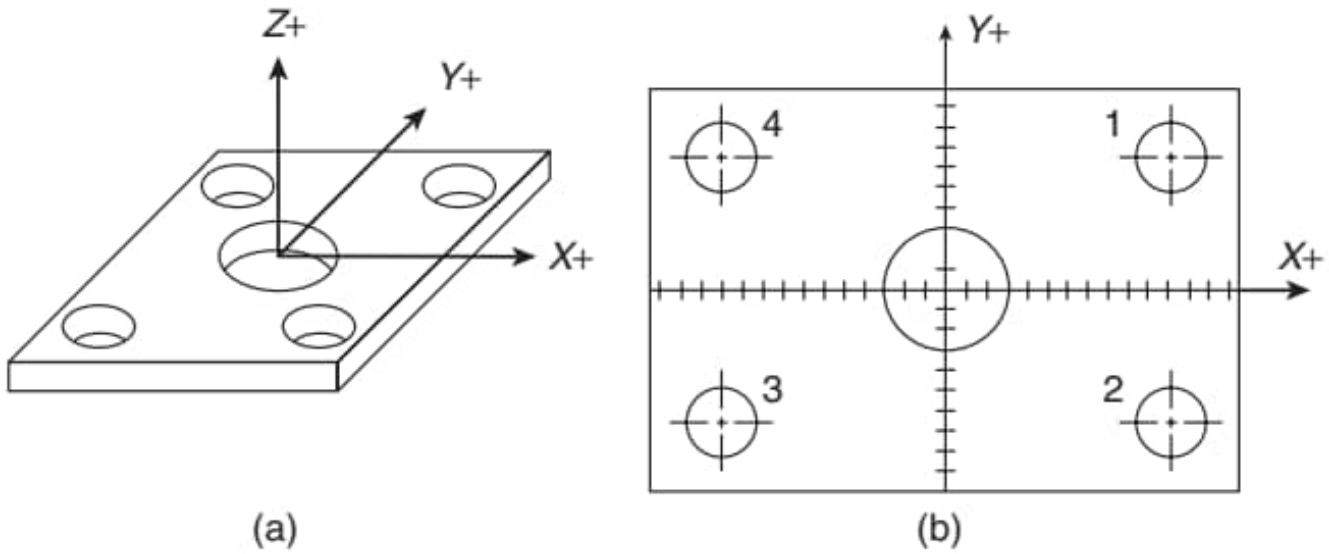

(a) Actual shape and (b) plan view

Position	Absolute	Incremental
Hole 1	X+11, Y+6	X+11, Y+6
Hole 2	X+11, Y−6	X0, Y−12
Hole 3	X−11, Y−6	X−22, Y0
Hole 4	X−11, Y+6	X0, Y+12
Back home	X0, Y0	X+11, Y−6

Dr. S.R. Manik
Dr. A.K. Pattanaik

- Origin (X0, Y0): centre of the pre-machined central hole; it can be **any convenient point**.
- **Absolute:** each hole is located from the origin. **Incremental:** each move is from the **last position**.

Point-to-Point and Continuous Path (Contouring) Systems

NC systems are classified by **control loop** (open/closed), **controller** (hardware NC/software CNC), **programming** (absolute/incremental) and **functioning** (point-to-point/contouring).

Aspect	Point-to-point (PTP)	Contouring
Controlled	Only the final position of table or tool	The path and feed rate between positions
Machining	Only after reaching the location; none during travel	Continuously while the table moves
Example	NC/CNC drilling machine	NC milling machine
Feed motor	Stepper motors may be used (no cutting load)	Servomotors; stepper motors are unstable at high speed and torque

Prepared By:
Dr. S. R. Parimanik
Dr. A.K. Pattanaik

Three types of contouring

1. Straight cuts along or parallel to X, Y or Z (turning, grooving, slotting): possible with PTP-type NC
2. Inclined straight cuts in 2-D or 3-D: need **linear interpolation**
3. Continuous cuts along curved paths: need **circular interpolation**

Linear Interpolation

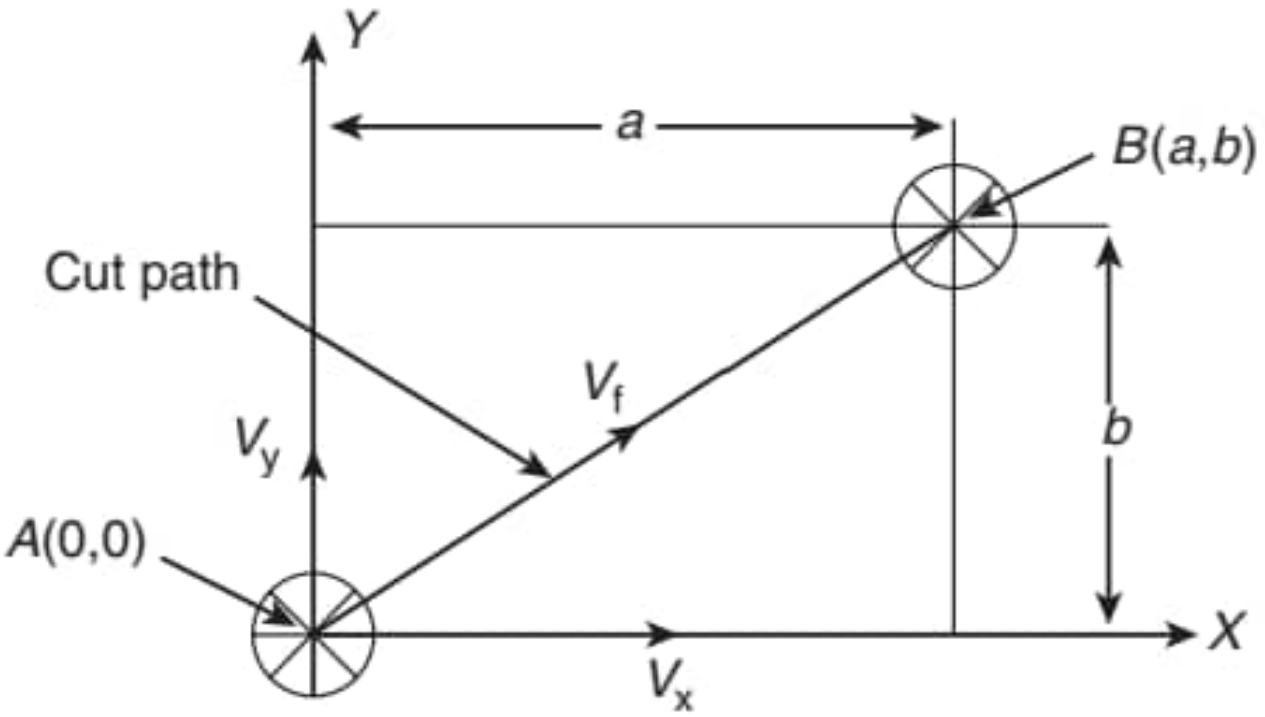

Continuous cut along an inclined straight path

- Inclined straight cuts and circular paths need **interpolation** by the **DPU**.
- Cut **A(0,0) → B(a,b)** at feed velocity **Vf** is the resultant of travel **a** along X and **b** along Y.
- The interpolator converts Vf into velocity commands **Vx** and **Vy** (pulses per second) for each axis drive.

Dr. A.K. Pattanaik

$$\Delta t = \frac{\sqrt{a^2 + b^2}}{V_f}$$

$$V_x = \frac{aV_f}{\sqrt{a^2 + b^2}}$$

$$V_y = \frac{bV_f}{\sqrt{a^2 + b^2}}$$

Circular Interpolation

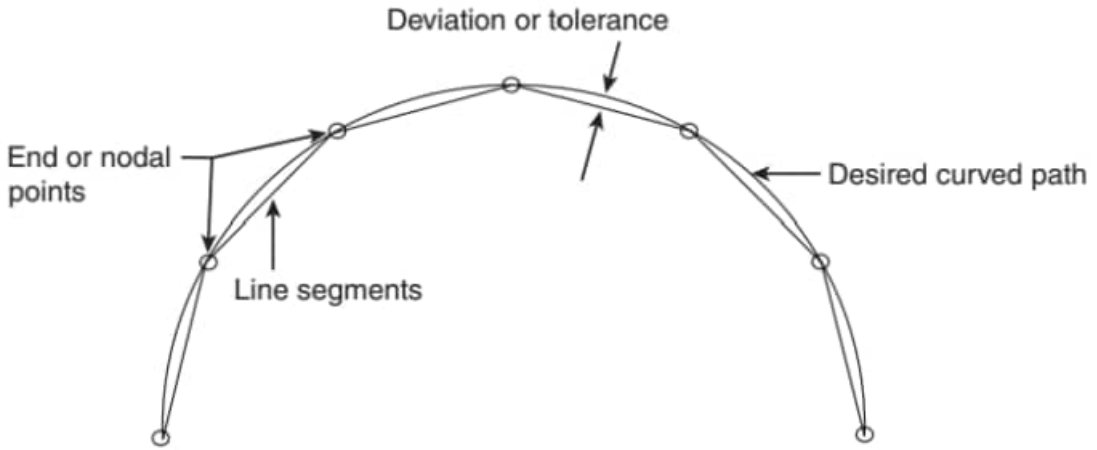

Segmentation of a curved path

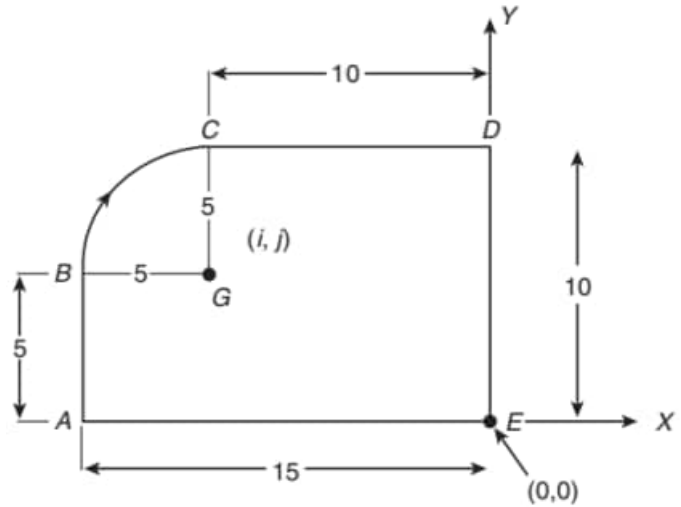

Machining a circular path

- A curved path is cut as many short **line segments**; specifying every end point by hand is tedious.
- The **circular interpolator** generates the segments itself. The programmer gives only the **two end points**, the **centre** and the **direction**.
- Arcs lie in a **major plane** (XY, YZ, ZX); each quadrant is a separate block.

Prepared By: Dr. S.R. Parimanik Dr. A.K. Panaik

Arc B → C (BLU = 10 µm)

B (−15, 5), C (−10, 10), centre G (−10, 5) mm
Absolute: X −10000 Y 10000 i −10000 j 05000
Incremental: X 05000 Y 05000 i 05000 j 00000

Advantages of CNC Machine Tools

Programming and storage

1. Programs **entered through the keyboard**, quickly and in-situ
2. **Easy editing** of any program
3. **Many programs stored** in memory, run any number of times
4. Programs prepared by **playback**
5. **Canned cycles, do loops, subroutines** ease programming
6. **Dry run** on screen before machining

Control and capability

1. Software controls **tool change, turret indexing, spindle speed**
2. Quick change of **unit, dimension mode, scale, tool offsets**
3. Fast, precise **contoured paths** by efficient interpolation
4. High **accuracy and repeatability**; little need for jigs and fixtures
5. Links with **CAD-CAM** and **remote control by PC**

This is for educational purpose only.

Basic Construction and Working Principle of CNC Machine Tools

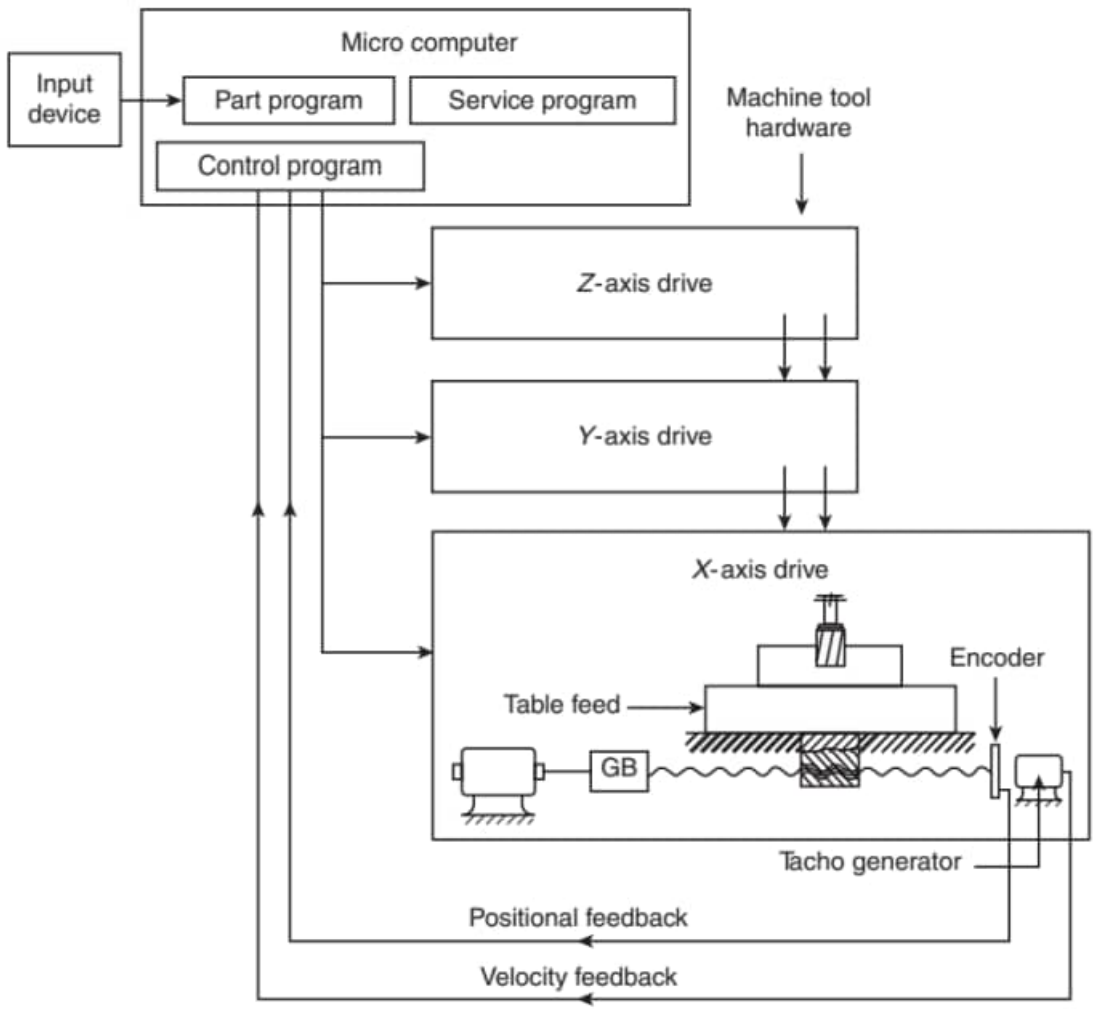

Basic working principle of CNC machine tool

- NC is mostly **hardware-based**; CNC is mostly **software-based**, with a computer-integrated controller replacing the MCU.

CNC software: three programs

1. **Part program**: geometry, dimensions, tool–work motion sequence, speeds and feeds
2. **Service program**: checks and edits the part program
3. **Control program**: generates pulses for each axis; does interpolation and acceleration/retardation; uses feedback

Feedback devices

- **Encoder**: pulses per step of leadscrew rotation (1 pulse = 1 BLU), giving **positional feedback**
- **Tachogenerator**: voltage proportional to speed, giving **velocity feedback**

Prepared By: R. Parimanik A.K. Puttaraju

Machining Centres and Turning Centres



Turning centre



Machining centre

- Since about **1980**, stand-alone CNC machines have been combined into centres.
- **Turning centre:** lathe + drilling + boring work.
- **Machining centre:** CNC milling + drilling + boring.

Machining centres vs stand-alone CNC milling machines

1. Greater **versatility**
2. Large **tool bank** of **20–250** cutting tools
3. Quick tool change by an **automatic tool changer (ATC)**
4. Saves **space, operators, production time and maintenance cost**

This is for educational purpose only.

Manual Part Programming for CNC Machine Tools

Part programs are written **manually** for simple jobs, or **with computer aid** for complex tool paths, interpolation and repetitive cycles.

Steps in part programming

1. Study machining requirements and **machine capability**
2. Select and prepare the **blank, tools and clamping**
3. **Process planning**: operations, sequence, tools, cutting fluid
4. Select **machining parameters** (speed, feed)
5. Plan the **tool path**
6. **Write the program** following the language rules
7. **Check** the program before downloading

Datum selection

- Keep the job in the **first quadrant**; take the **Z datum on the job surface**.
- Use a **floating datum** and standard tools.

Post program checking

1. **Dry run** on the computer screen
2. **Idle run** on the machine without cutting
3. **Plot the tool path** in 2-D

This is for educational purpose only.

Structure of a Part Program: Block and Word

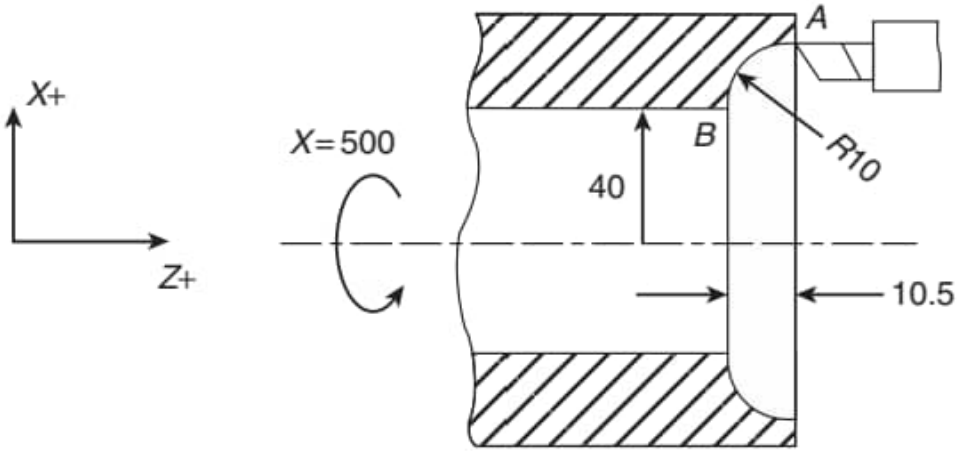

Form turning in a CNC lathe

- A **part program** is a series of coded lines; each line, a **block**, does one elementary machining step in the same setting.
- A **word** is the smallest unit: an **address letter** followed by **numerical data**.
- Words need not appear in every block or in any fixed order.

N105 G03 X40.0 Z−12.5 R10.0 S500 F0.10 T0707 M08

Word	Meaning	Word	Meaning
N105	Block number 105	S500	Spindle speed 500 rev/min
G03	Preparatory function: CCW circular arc	F0.10	Feed 0.10 mm/rev
X40.0 Z−12.5	Coordinates of end point B	T0707	Standard tool
R10.0	Radius of curvature 10 mm	M08	Coolant pump on

Prepared By: Dr. A.K. Srimanik

Summary: CNC Machine Tools

Topic	Key points
Working principle	Each motion commanded as a number of pulses; one pulse moves one BLU
Control loops	Open loop: stepper motor, no feedback. Closed loop: servo motor, encoder, comparator
Control system	MCU (DPU + CLU), servomechanism, kinematic chains, feedback unit
Coordinates	Right-hand system; Z along spindle; absolute vs incremental dimensioning
Path control	Point-to-point (drilling) vs contouring (milling); linear and circular interpolation
CNC	Software-based; part, service and control programs; encoder and tachogenerator
Centres and programming	Turning and machining centres with ATC; part program = blocks of words

Prepared By:
Dr. S.R. Parimanik
Dr. A.K. Pattanaik