Automobile Engineering

1

Vehicle Introduction & Clutches

By: PULKIT AGRAWAL

Assistant professor

Mechanical Engg. Dept.

MODULE I (14 HOURS)

Introduction

Main units of automobile chassis and body, different systems of the automobile, description of the main parts of the engine, motor vehicle act.

Power for Propulsion

Resistance to motion, rolling resistance, air resistance, gradient resistance, power required for propulsion, tractive effort and traction, road performance curves.

Breaking systems

Hydraulic breaking system, breaking of vehicles when applied to rear, front and all four wheel, theory of internal shoe brake, design of brake lining and brake drum, different arrangement of brake shoes, servo and power brakes.

MODULE II (12 HOURS)

Transmission Systems

Layout of the transmission system, main function of the different components of the transmission system, transmission system for two wheel and four wheel drives. Hotchkiss and torque tube drives.

Gear box : Sliding mesh, constant mesh and synchromesh gearbox, design of 3 speed and 4 speed gear box, over drive, torque converter, semi and fully automatic transmission.

Hookes joint, propeller shaft, differential, rear axles, types of rear axles, semi floating, there quarter floating and full floating types.

MODULE III (14 HOURS)

Front wheel Geometry and steering systems : Camber, castor, kingpin inclination, toe-in and toe- out, centre point steering condition for true rolling, components of steering mechanism, power steering.

Electrical system of an automobile : Starting system, charging system, ignition system, other electrical system.

Electrical vehicles:

History, electrical vehicles and the environment pollution, description of electric vehicle, operational advantages, present EV performance and applications, battery for EV, Battery types and fuel cells, Solar powered vehicles, hybrid vehicles.

Recommended Books

1. Automobile Mechanics , N.K.Giri, Khanna publishers
2. Automobile Engineering, K.M. Gupta, VolI & II, Umesh Publication
3. Automobile Engineering, Vol. I & II, Kirpal Singh, Standard Publications
4. A Text Book of Automobile Engineering, R.K.Rajput, Laxmi Publishers
5. Automotive mechanics: William h. Crouse and Donald L. Anglin, TMH

What is Automobile

- A self propelled passenger vehicle that usually has 4 wheels & internal combustion engine used for land transport (people & items).

Components of Automobile

- Basic Structure
- Power plant
- Transmission system
- Auxiliaries
- Controls
- Superstructure

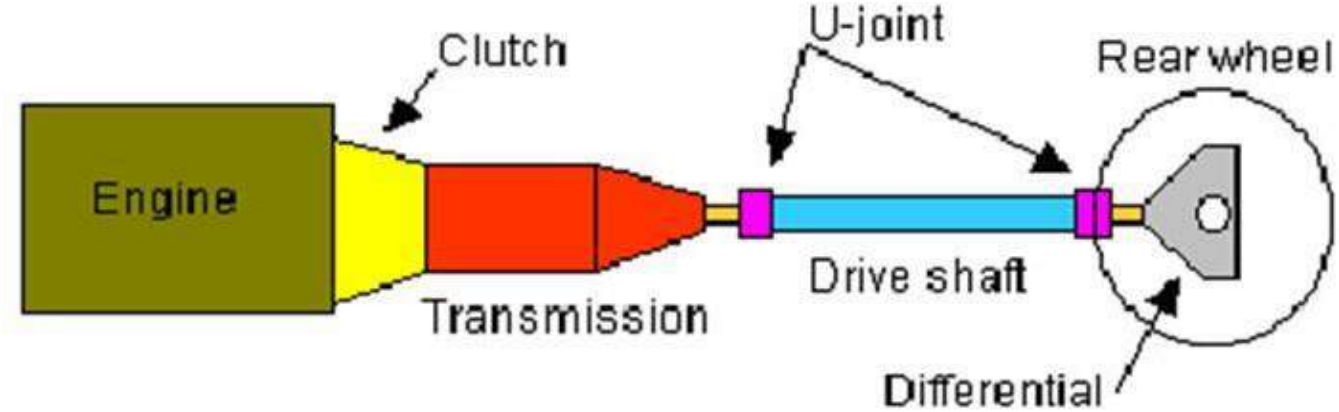

Transfer power from engine to wheels

TRANSMISSION

- Clutch
- Gear box
- Universal joints
- Propeller shaft
- Differential gears
- Axial
- Wheel

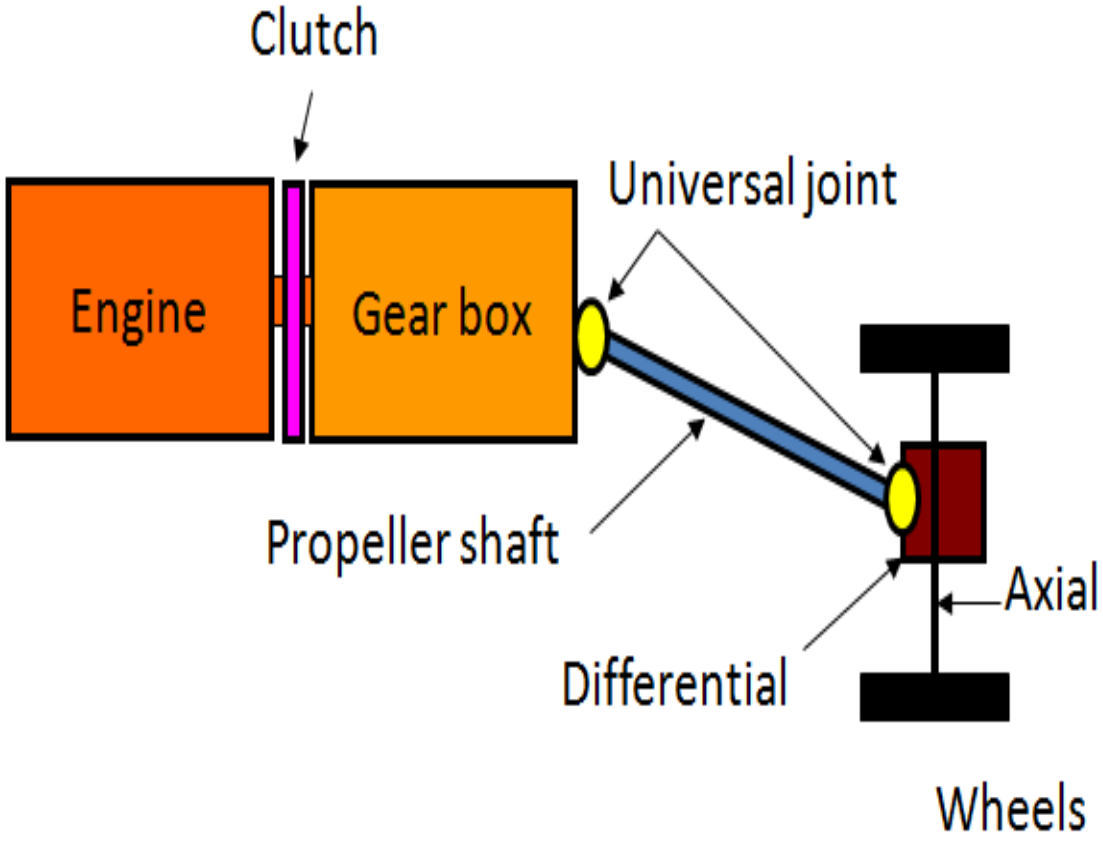

POWER TRAIN

Classification of Automobile

1. Purpose:

- Passenger carriers:

- Good carriers:

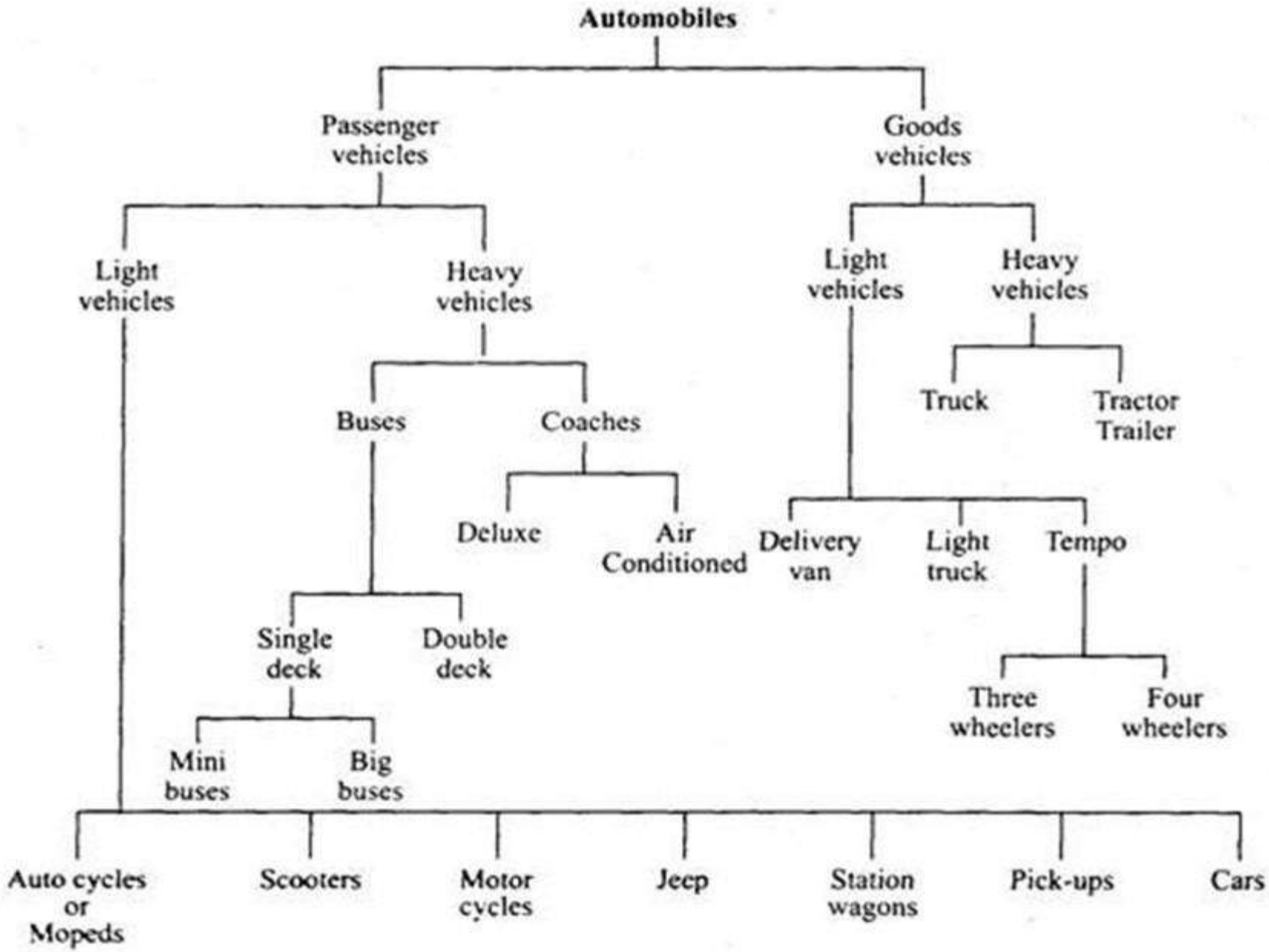
Automobiles
Passenger vehicles
Goods vehicles
Light vehicles
Heavy vehicles
Light vehicles
Heavy vehicles
Buses
Coaches
Truck
Tractor Trailer
Deluxe
Air Conditioned
Delivery van
Light truck
Tempo
Single deck
Double deck
Three wheelers
Four wheelers
Mini buses
Big buses
Auto cycles or Mopeds
Scooters
Motor cycles
Jeep
Station wagons
Pick-ups
Cars

Classification of Automobile

2. Capacity:

- heavy transport vehicles (H.T.V) like truck & buses.
- Light transport vehicles (L.T.V) like cars, jeeps etc.

3. Fuel used:

- petrol vehicles
- Diesel vehicles
- Gas vehicles
- Electric vehicle

4. wheels:

- Two wheelers like scooters, motor cycles etc.
- Three wheelers like autorickshwas, tempo.
- Four wheelers like cars, jeeps.
- Six wheelers like trucks, bus.

5. Body style:

- Closed cars like: saloon, coupe etc.
- Open cars like sports car, convertible car.
- Special style such as estate car, station wagon etc.

6. Drive:

- Left hand drive e.g. vehicles use in U.S.A
- Right hand vehicle e.g. Indian vehicles.
- Front wheel drive
- Rear wheel drive
- All wheel drive

7. Transmission:

- Manual
- Semi automatic
- Fully automatic

8. Suspension:

- Conventional: Leaf spring

- Independent: Coil springs, Pneumatic.

9. Position of engin

- Engine in front

- Engine inside driver's cabine

- Engine in rare side

Parts of Automobile

- Machine portion: Chassis
- Carriage portion: Body

Automobile = Chassis + Body

- Body (carriage portion): portion of an automobile where passengers have their seats or where cargo to be carried is placed.
- Chassis (machine portion): contains almost all the parts of an automobile which are necessary to drive vehicles.

Machine Portion

- Every automobile consists of four basic units:

➢ Chassis

➢ Transmission

➢ Engine

➢ Electrical equipments

Transmission

- This unit transmits the power from the engine to the wheels.
- Consists of:
  - Clutch
  - Gear box
  - Final drive
  - Axles & differential.

Engine :

- Engine is the source of power.
- Consists of following basic system:
  - Fuel system
  - Ignition system
  - Lubrication system
  - Cooling system

Electrical system

- Consists of:
  - Battery
  - Alternators
  - Ignition system
  - Lightening system

Chassis

- This part of an automobile supports its body, engine & transmission system.
- The chassis contains all the major units necessary to propel the vehicle, direct its motion, stop it, and allow it to run smoothly over uneven surfaces.

- The chassis of an automobile consists of the following components suitably mounted:

  (i) Frame (ii) Front axle (iii) Steering system (iv) Rear-axle (v) Suspension system (vi) Transmission (vii) Brake system (viii) Engine (ix) Electrical system. The chassis is sub-divided into (i) Power plant (ii) Running gear.

Chassis

All the above mentioned components are mounted in either of the following two ways :

1. Conventional construction: In this case a separate frame is used.
2. Frameless or unitary construction: Here no separate frame is employed.

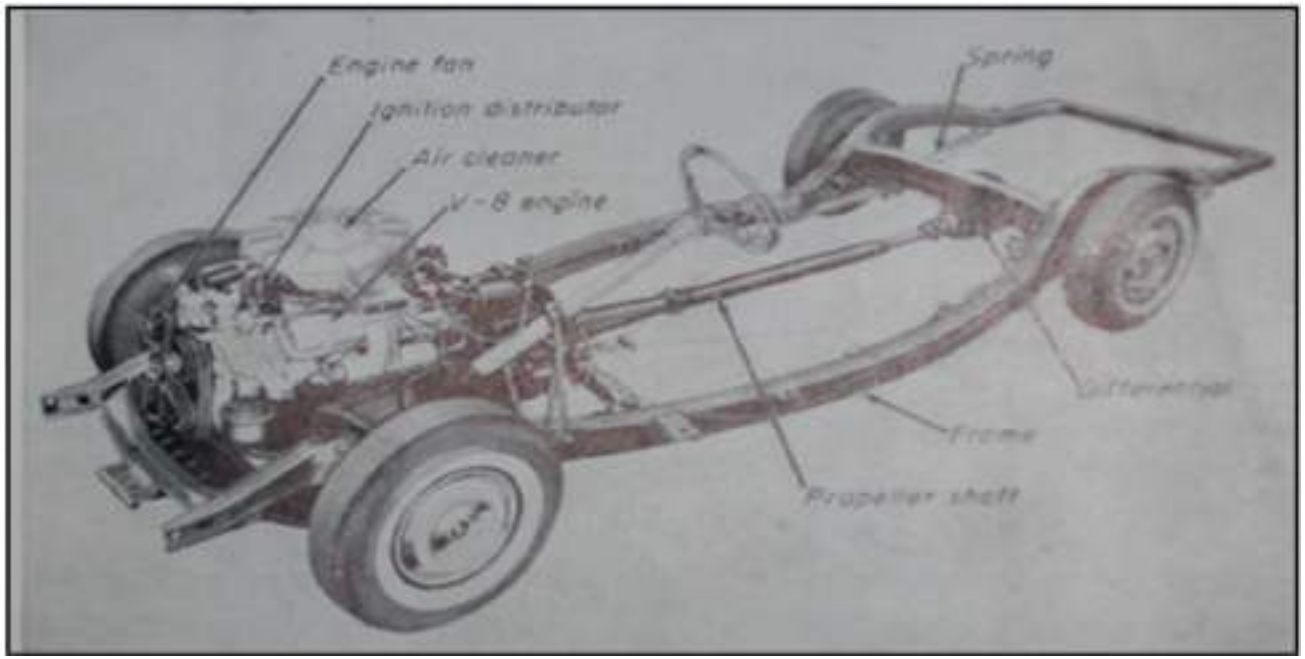

SPRING SHACKLE
DIFFERENTIAL
REAR-AXLE HOUSING
SHOCK ABSORBER
FRAME
STEERING WHEEL
AIR CLEANER
INTAKE MANIFOLD
CARBURETOR
OIL FILLER CAP
ENGINE
FAN
LEAF SPRING
PROPELLER SHAFT
UNIVERSAL JOINT
MUFFLERS
TRANSMISSION (HYDRA-MATIC)
EXHAUST MANIFOLD
STARTING MOTOR
GENERATOR
UPPER SUSPENSION ARM
CRANKSHAFT PULLEY
STABILIZER BAR

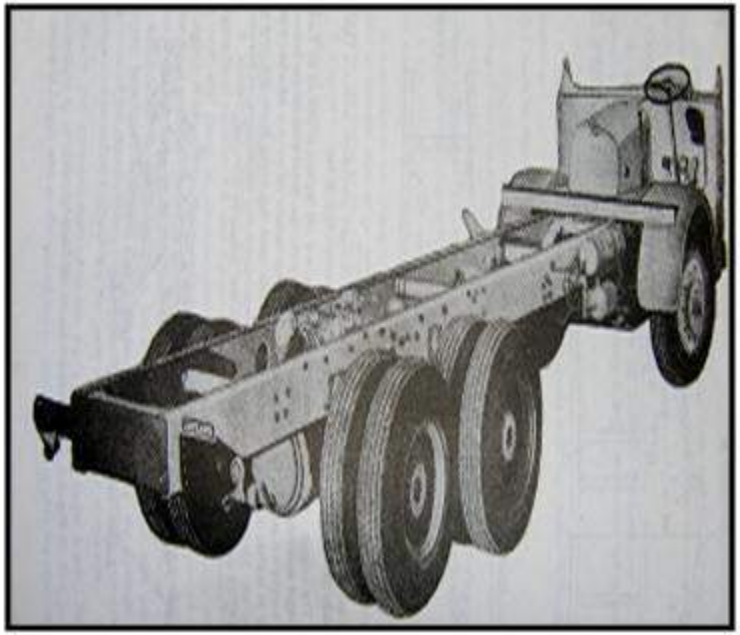

Chassis Classification

(i) Conventional chassis : In this type of chassis, engine is fitted in front of the driver cabin or driver seat such as in cars and previous model of Tata trucks. Here, the driver sits behind the engine (i.e., quite far off from the front axle) and as such he cannot see the road just in front of the front tyres. Owing to this reason slope is provided at the mudguard and bonnet to enable the driver to see close to the wheels as far as possible.

(ii) Semi-forward chassis : This is such a chassis where half portion of the engine is in the driver cabin and remaining half is outside the cabin such as in Standard. Bedford Pick-ups and Tab a trucks.

(iii) Full-forward (or Bus) chassis : In this type of chassis the complete engine is mounted inside the driver cabin.

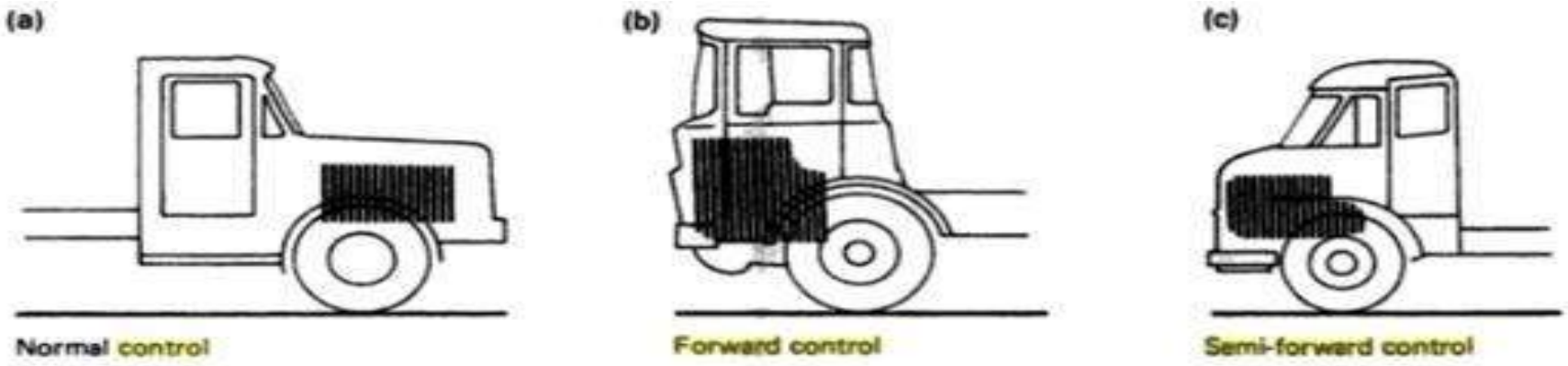

Types of Chassis Layout

- Based on:

➢ Types of drive:

(i) Front Wheel Drive

(ii) Rear Wheel Drive

(iii) Four Wheel Drive

➢ Power plant location:

(i) Engine at front

(ii) Engine fitted in front but crosswise

(iii) Engine fitted at the centre of the chassis

(iv)) Engine fitted at the back

Front Wheel Drive Layout

- Front wheel drive layout are those in which the front wheels of the vehicle are driven.
- Generally considered superior to FR (front-engine, rear-wheel-drive layout) cars in conditions such as snow, mud.
- Audi A3 , Audi A4 and Audi A6.

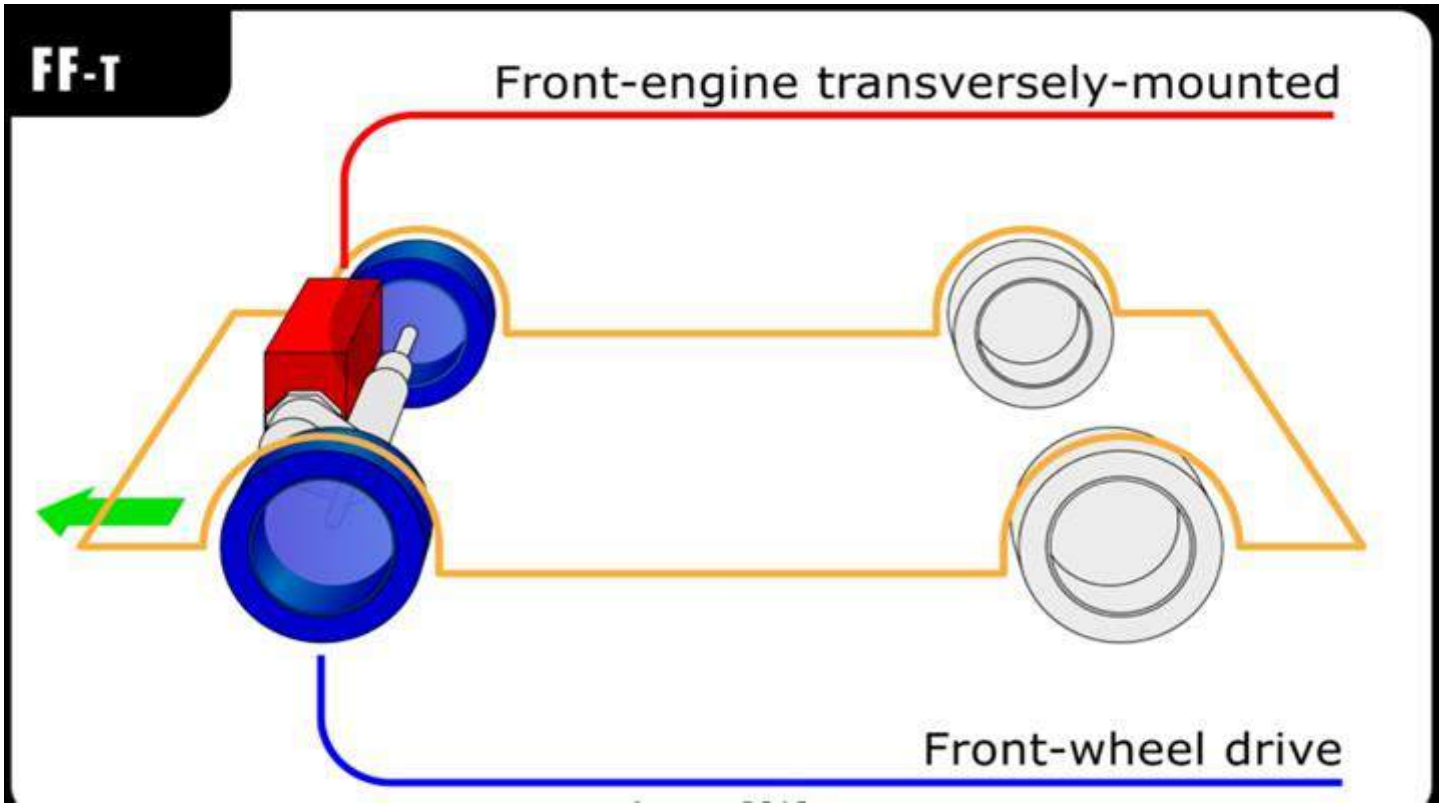

Advantages of Front Wheel Drive

- Interior space: no need to devote interior space for a driveshaft tunnel or rear differential, increasing the volume available for passengers and cargo.
- Weight: Fewer components.
- Fuel Efficiency: Improved fuel efficiency due to less weight.
- Cost: Less material
- Improved drive train efficiency: direct connection between engine and transaxle reduce the mass and mechanical inertia of the drive train.
- Improved Traction & Stability: On wet, snowy, or icy surfaces.

Disadvantages of Front Wheel Drive

- Nose heavy (more weight distribution forward): which makes them prone to understeer especially in high horse power applications.

- High Turning circle: almost always use a Transverse engine installation, which limits the amount by which the front wheels can turn, thus increasing the turning circle of a front-wheel-drive car compared to a rear-wheel-drive one with the same wheelbase.

- Size of the engine: FE transverse engine layout (also known as "east-west") restricts the size of the engine that can be placed in modern engine compartments, so it is rarely adopted by powerful luxury and sports cars.

Disadvantages of Front Wheel Drive

- FE configurations can usually only accommodate Inline-4 and V6 engines, while longer engines such as Inline-6 and 900 big-bore V8 will rarely fit.
- Heavier use of the front tires: it makes heavier use of the front tires causing more wear in the front that in a rear wheel drive layout

HYUNDAI i10 iRDE

Engine 1086cc, 67PS, 98Nm
Transmission Five-speed manual, front-wheel drive
Performance 15.5 secs 0-100km/h,
Fuel efficiency 14.9kmpl (overall)

intelligent responsive drive engine

Rear Wheel Drive Layout

- Rear wheel drive typically places the engine in the front of the vehicle and the driven wheels are located at the rear a configuration known as front engine, rear wheel drive layout (FR layout).

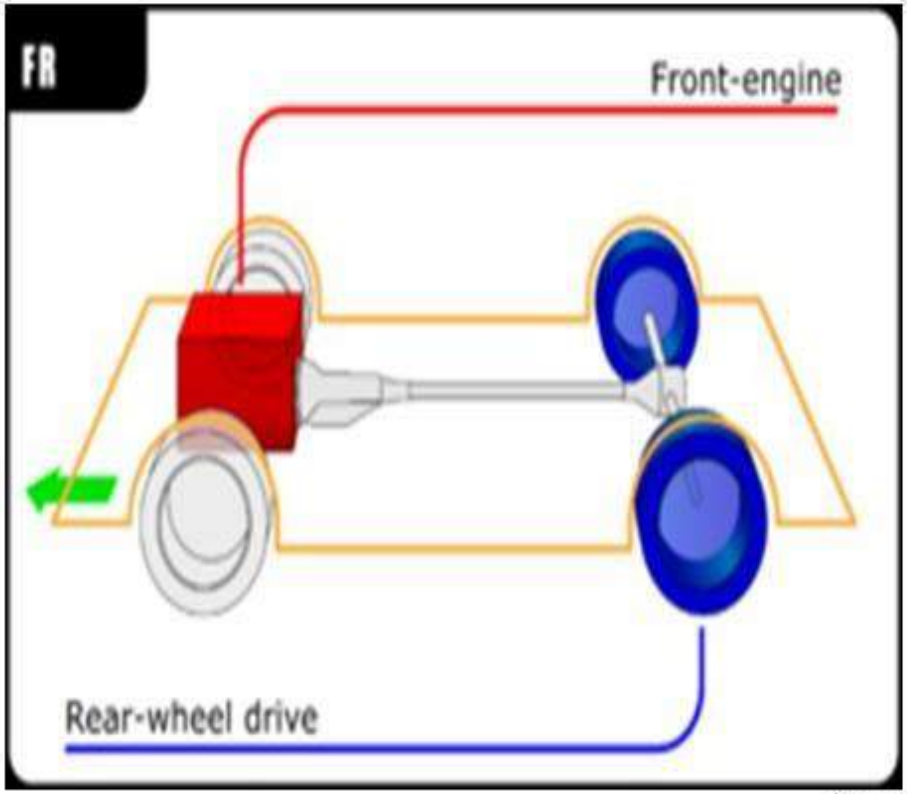

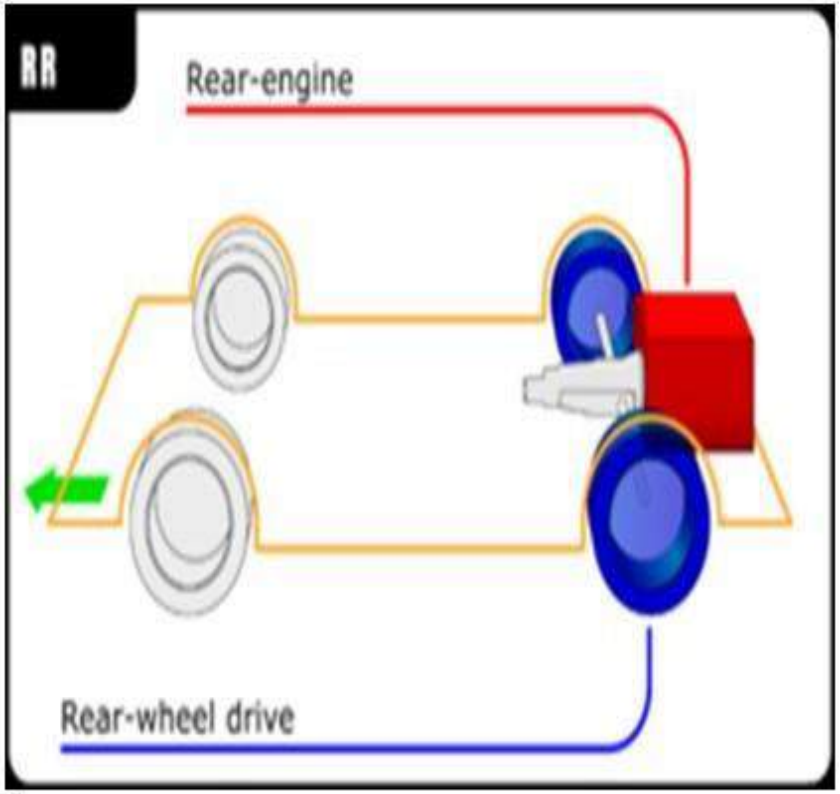

Rear Wheel Drive Layout

- FR layout is often chosen for its simple design & good handling characteristics.

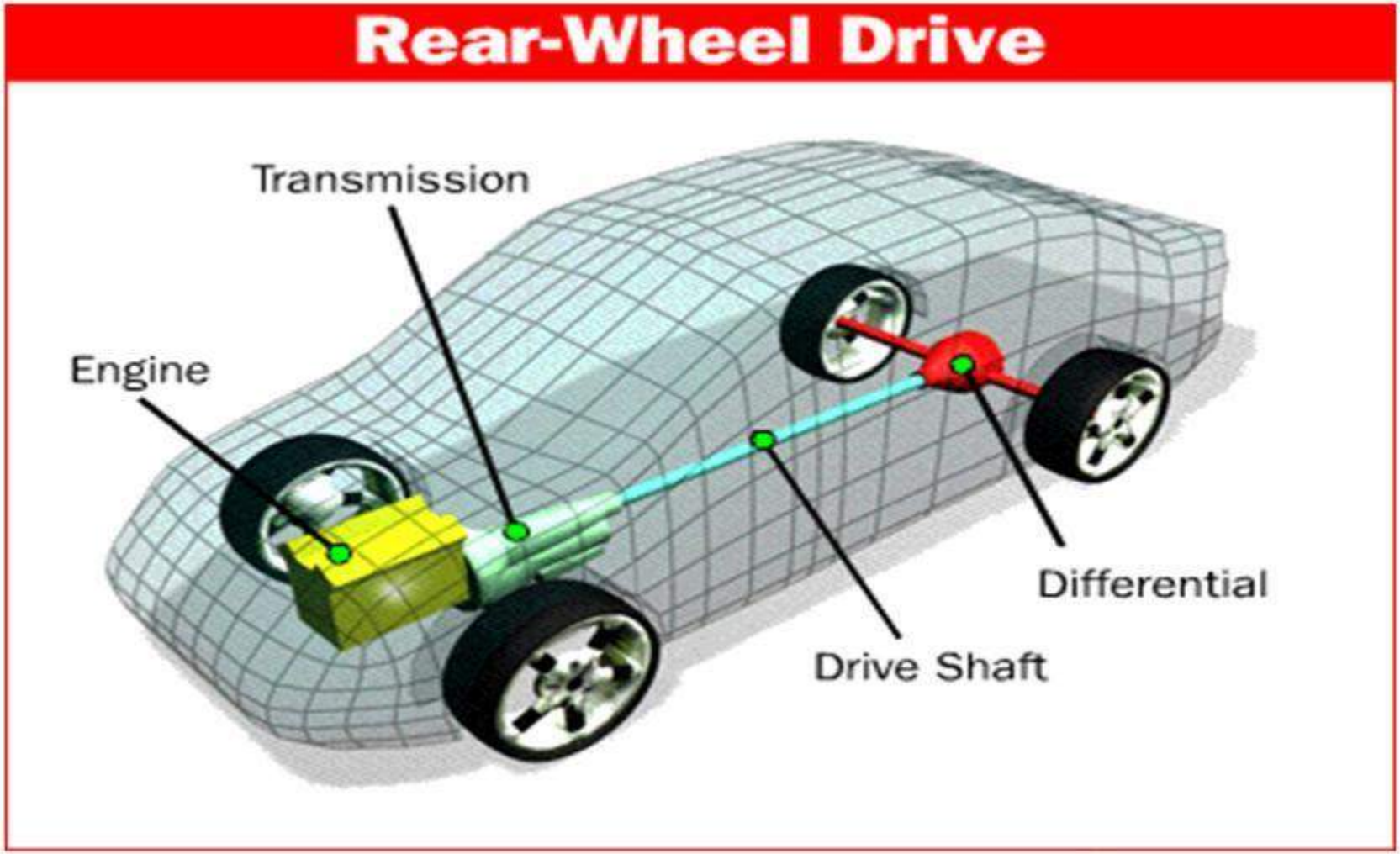

Rear Wheel Drive Layout

Volkswagen Beetle

VW New Beetle

RR Layout

5 generation BMW 3-Series

Rear wheel drive

Advantages of Rear Wheel Drive Layout

- Even weight distribution
- Turning radius As no complicated drive shaft joints are required at the front wheels, it is possible to turn them further than would be possible using front-wheel drive, resulting in a smaller steering radius for a given wheelbase.
- Better handling the more even weight distribution and weight transfer improve the handling of the car.
- Can accommodate more powerful engines as a result of the longitudinal orientation of the drivetrain, such as the Inline-6, 90° big-bore V8, V10 and V12 making the FR a common configuration for luxury and sports cars.

Disadvantages of Rear Wheel Drive Layout

- On snow, ice and sand, rear-wheel drive loses its traction advantage to front- or all-wheel-drive vehicles, which have greater weight on the driven wheels.
- Increased weight The components of a rear-wheel-drive vehicle's power train are less complex, but they are larger.
- Cost of materials and Increased complex assembly of FR layouts.
- Low Mechanical Efficiency- The possibility of a slight loss in the mechanical efficiency of the drivetrain (approximately 17% losses between engine flywheel and road wheels compared to 15% for front-wheel drive)

Body style	4-door saloon
Layout	FR layout
Transmission	5-speed manual

Four wheel drive layout (all wheel drive)

- Most 4WD layout are front engined and are derivatives of earlier front engine, two wheel drive designs.

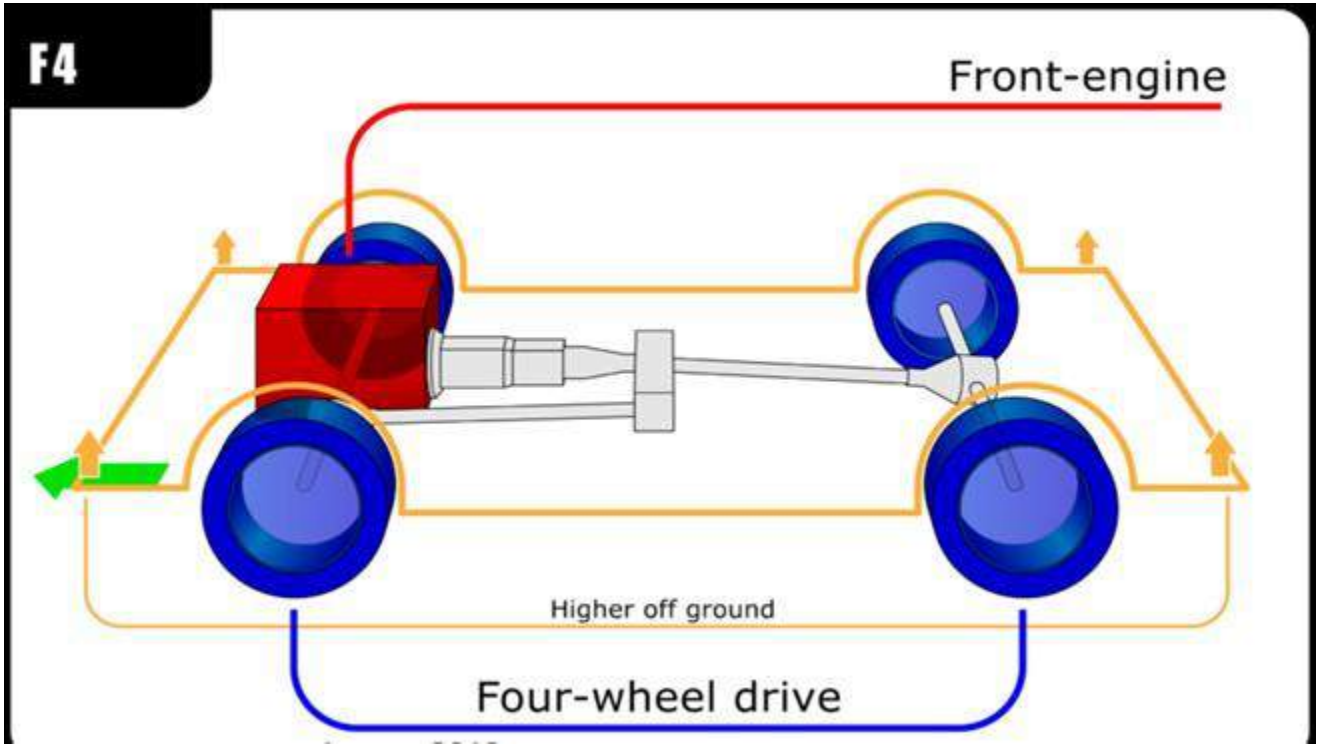

Four wheel drive layout (all wheel drive)

- Four-wheel drive, All-wheel drive, AWD, 4WD, or 4x4 ("four by four") is a four-wheeled vehicle with a drivetrain that allows all four wheels to receive torque from the engine simultaneously.

- 4x2 a four-wheel vehicle that transmits engine power to only two axle-ends: the front two in front-wheel drive or the rear two in rear-wheel drive.

Murciélago (M4)

Subaru Impreza (rally car)

Humvee (HMMWV)

High Mobility Multipurpose Wheeled Vehicl

Advantages of Four wheel Drive

- High Traction: Traction is nearly doubled compared to a two-wheel-drive layout.

- Better Weight Distribution: Because additional components are needed to transfer power to the rear wheels, more of the vehicle's weight is located toward the rear. This balances the weight of the engine, which makes all front-wheel drive vehicles heavier in the front.

- Off-Road Capability: Many trucks and SUVs intended for off-road use feature all-wheel or four-wheel drive systems. This allows them to drive over uneven terrain where one or more wheels may come away from the road surface where that cannot provide traction.

- The vehicle can continue to move as long as there is sufficient contact between the road surface and other drive wheels. These all-wheel drive vehicles are also more capable of moving on muddy surfaces.

Disadvantages of Four wheel Drive

- Complex Machinery & Transmission: require more machinery and complex transmission components, and so increase the manufacturing cost of the vehicle and complexity of maintenance procedures and repairs compared to 2WD designs.

- Stopping Distance: While the weight of 4WD vehicles improves their handling, it also increases the distance they require to stop.

- Poor performance in ideal dry conditions: 4WD systems increase power-train mass, rotational inertia and power transmission losses, resulting in a reduction in performance in ideal dry conditions and increased fuel consumption compared to 2WD designs.

Power Plant Location

(i) Engine at front:

(a) conventionally the engines are fitted at front & drive is given to the wheels from the rear.

(b) In another arrangement the engine is fitted in front & drive is also given to the front wheels only as in matador vehicles.

(ii) Engine fitted in front but crosswise: in this arrangement the engine is fitted in front not in conventional way but crosswise as in maruti, B.M.C mini & drive is given to the front wheels only.

(iii)Engine fitted at the centre of the chassis : •In this case, the engine is fitted at the centre of the chassis i.e., under the chassis as in Royal Tiger World master buses previously plied by Delhi Transport Corporation.

(iv) Engine fitted at the back : shows a rear engine drive. Popular vehicles, employing this system are Renault, Dolphin and Volkswagon, where engine is fitted at the rear of the vehicle.

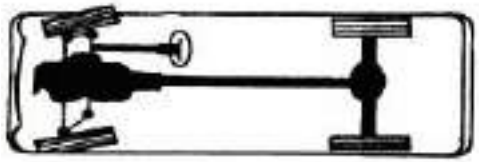

Fig. Conventional drive.

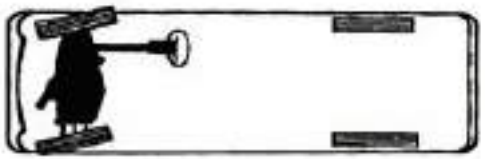

Fig. Front engine drive.

Fig. Centre engine drive.

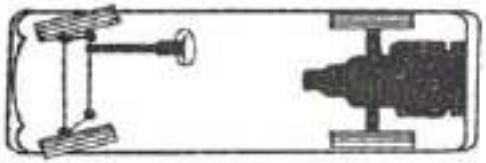

Fig. Rear engine drive.

Frame

- Function of the frame:

1. To support the chassis components & the body.
2. To understand static & dynamic loads without undue deflection or distortion.

Frame sections

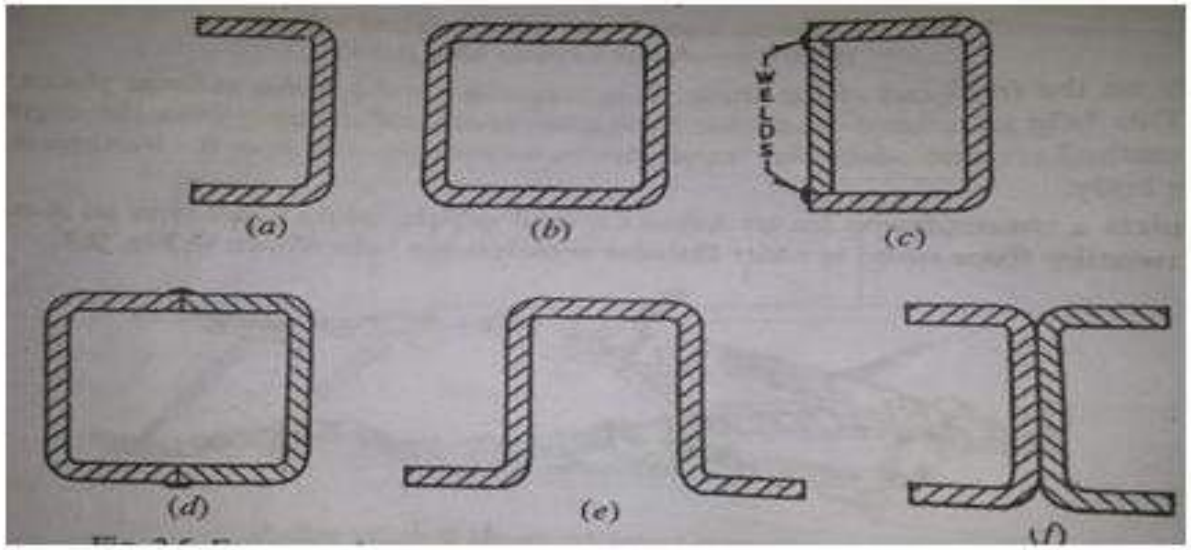

(a) Channel section (b), (c), (d) box section (d) hat section (e) double channel or I section

Frameless Construction

- In this type of construction heavy sides members used in conventional construction are eliminated & the floor is strengthened by cross members & the body all welded together. In some cases the sub frames are also used along with this type of construction.

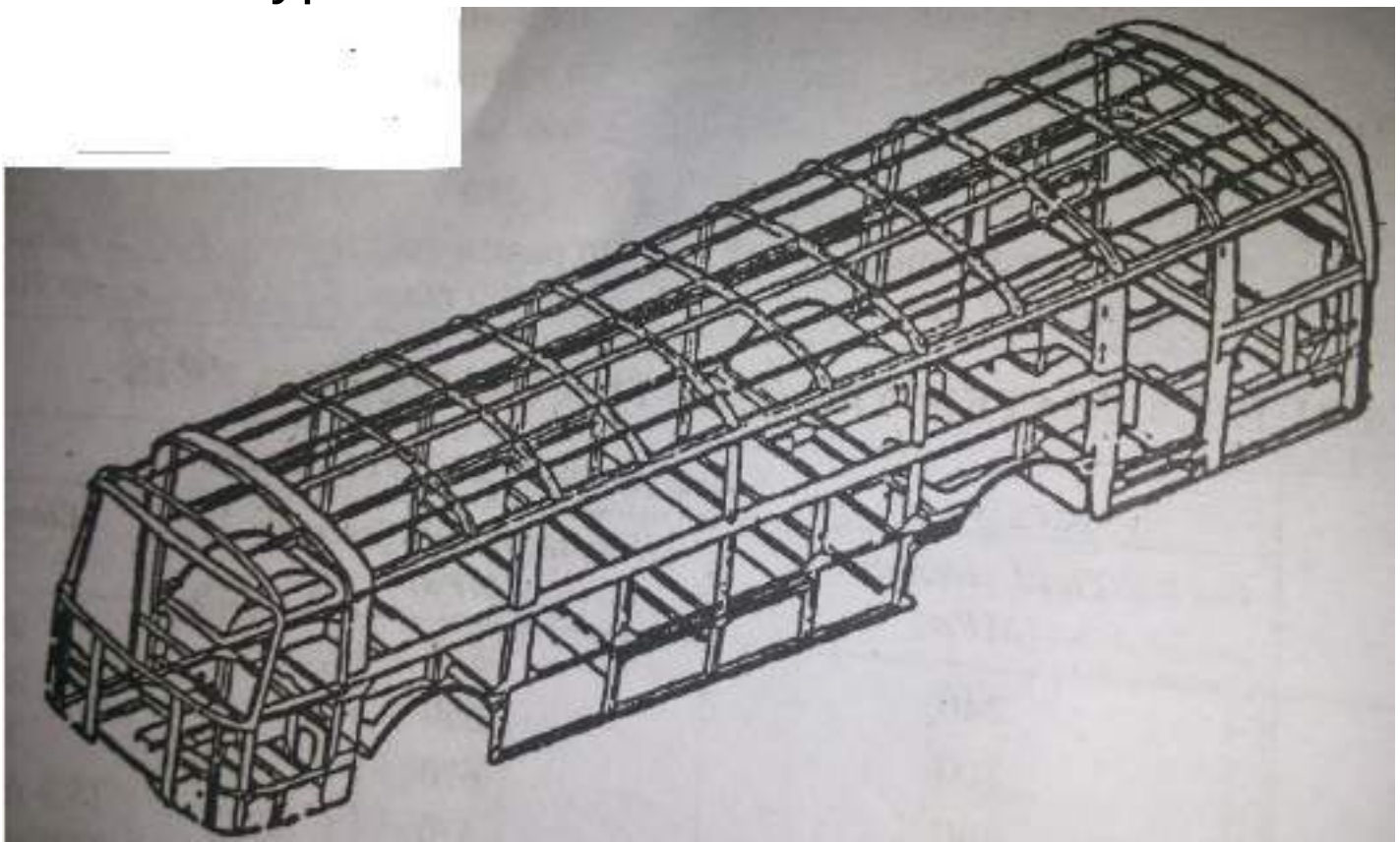

Need of clutch

- In a car, you need a clutch because by controlling the slippage between them the engine spins all the time, but the car's wheels do not. In order for a car to stop without killing the engine, the wheels need to be disconnected from the engine somehow. The clutch allows us to smoothly engage a spinning engine to a non-spinning transmission.

- A clutch works because of friction between a clutch plate and a flywheel.

Clutch

- In Automobiles, the clutch is used to engage or disengage the engine with the transmission system. It enables the rotary motion of one shaft to be transmitted to the second shaft as and when required.

- The clutch should be able to transmit the maximum torque. It should take drive gradually. During clutch application, the heat generated by the friction of clutch surfaces should be dissipated. During high speeds the clutch should be balanced.

Requirements of Clutch

- Torque transmission: The clutch should be able to transmit the maximum torque of the engine under all condition. It is usually designed to transmit 125 to 150 per cent of the maximum engine torque
- Gradual engagement: The clutch should positively take the drive gradually without the occurrence of sudden jerks.
- Heat dissipation: During clutch application, large amounts of heat are generated. The rubbing surfaces should have sufficient area and mass to absorb the heat generated. The proper design of the clutch should ensure proper ventilation or cooling for adequate dissipation of the heat.
- Dynamic balancing: This is necessary particularly in the high speed clutches not be tiresome to the driver.

Requirements of Clutch

- Vibration damping : Suitable mechanism should be incorporated with in the clutch, to eliminate noise produced in the transmission.
- Size: The size of the clutch must be smallest possible so that it should occupy minimum amount of space.
- Inertia : The clutch rotating parts should have minimum inertia. Otherwise, when the clutch is released for gear changing, the clutch plate will keep on spinning, causing hard shifting and gear clashing in spite of synchronizer.
- Clutch free pedal play: To reduce effective damping load on the carbon thrust bearing and wear thereof, sufficient clutch free pedal play must be provided in the clutch.
- Ease of operation: For higher torque transmissions the operation of disengaging the clutch must

Types of clutch

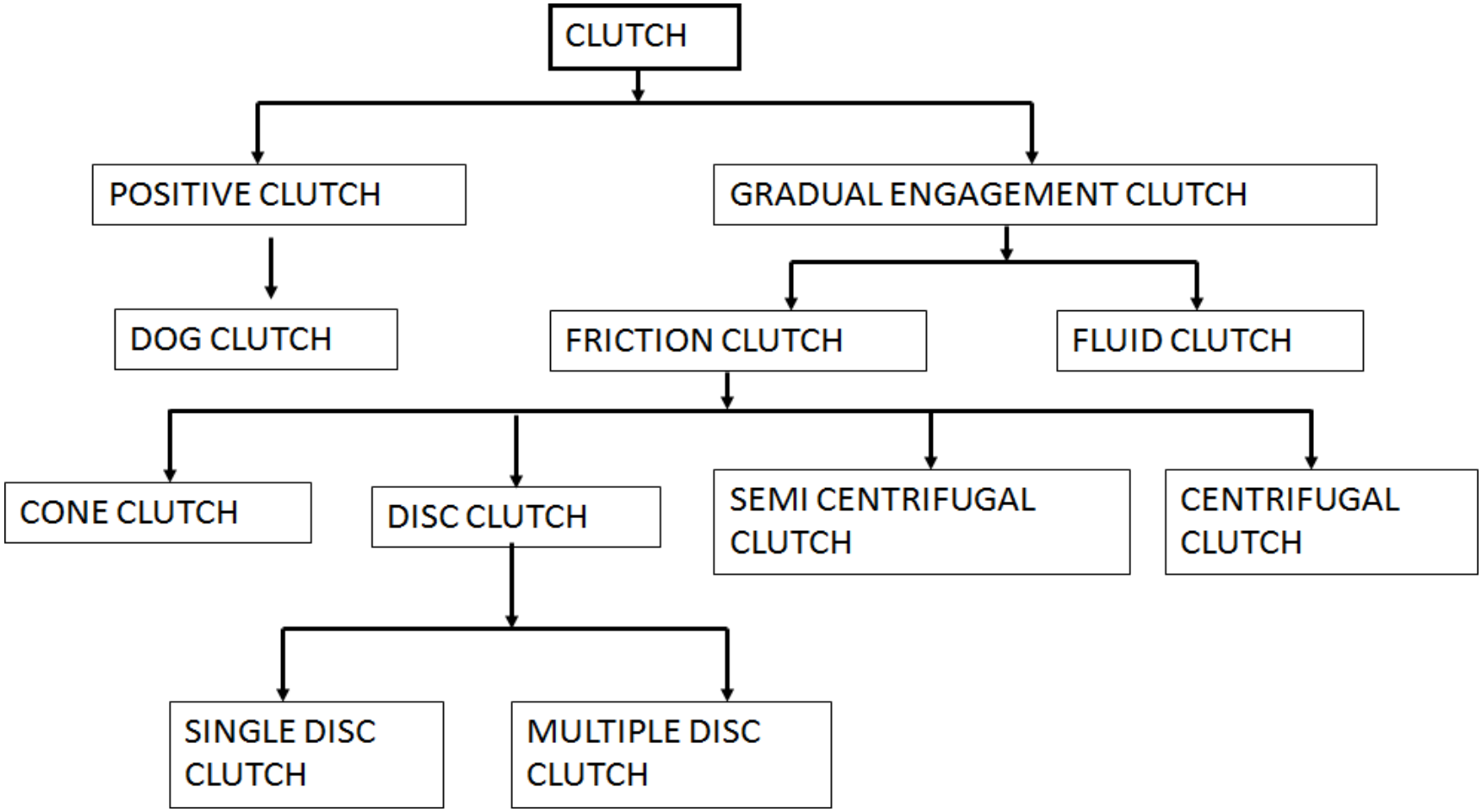

Gradual Engagement Clutches

- FRICTION CLUTCHES: Enable the driven member to be disengaged and engaged gradually with the driving member.
- Action depends on the friction force between the members.
- At start low frictional force and increases with the pressing force.
- Pressure exerted by means of coil springs.

• The Torque transmitted by a friction clutch depends upon the factors namely Coefficient of friction (u), Axial pressure (w) and Mean effective Radius of contact surfaces(R).

The Torque Transmitted (T) = μwR.

Basic Principle of Friction Type Clutch

- To understand the working principle of clutch, let's take two discs, first one driven by a power drill corresponds to the flywheel of a car, driven by the engine. If a second sanding disc is brought into contact with the first, friction makes it revolve too but more slowly. But when the second disc pressed against the first disc which is connect to the power drill, as the I pressure increases the two discs revolve as one. This is how a friction clutch works.

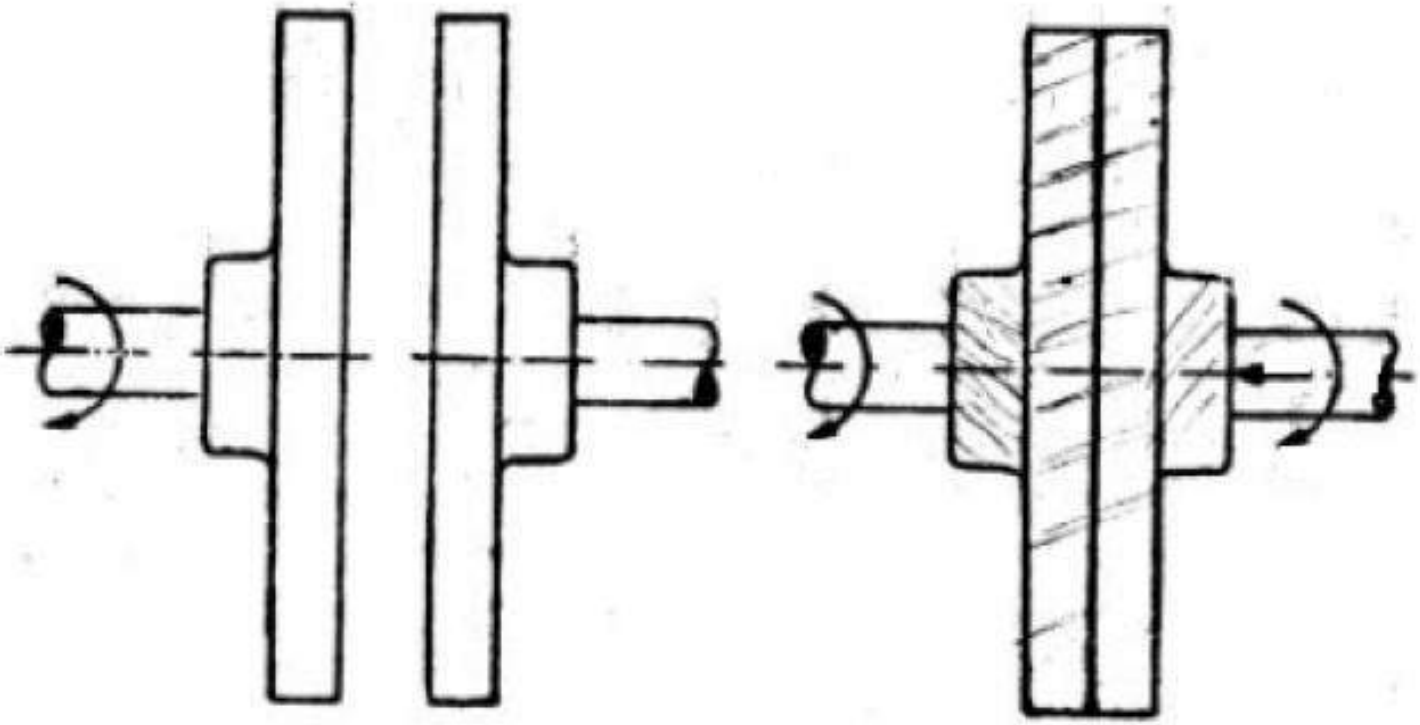

Types of friction clutches

a) Cone clutch

b) Single plate clutch

c) Mutilate clutch

d) Semi centrifugal clutch

e) Centrifugal clutch.

Construction And Working of Single Plate Clutch

- It is the most common type of clutch used in motor vehicles.
- A single disc or plate clutch consists of a clutch plate whose both sides are faced with a frictional material. It is mounted on the hub which is free to move axially along he splines of the driven (clutch) shaft.
- the pressure plate is mounted inside the clutch body which is bolted to the flywheel.
- Both the pressure plate and the flywheel rotate with the engine crank shaft.
- The pressure plate pushes the clutch plate towards the flywheel by a set of strong springs which are arranged radially inside the body
- When the clutch is engaged, due to the friction between the flywheel, clutch plate and pressure plate, revolves the clutch shaft which is connected to the transmission system also revolves.
- When the clutch pedal is pressed, the pressure plate moves back against the force of the springs, and the clutch plate becomes free between the fly wheel and pressure plate.

Construction and Working of Single Plate Clutch

COIL-SPRING CLUTCH

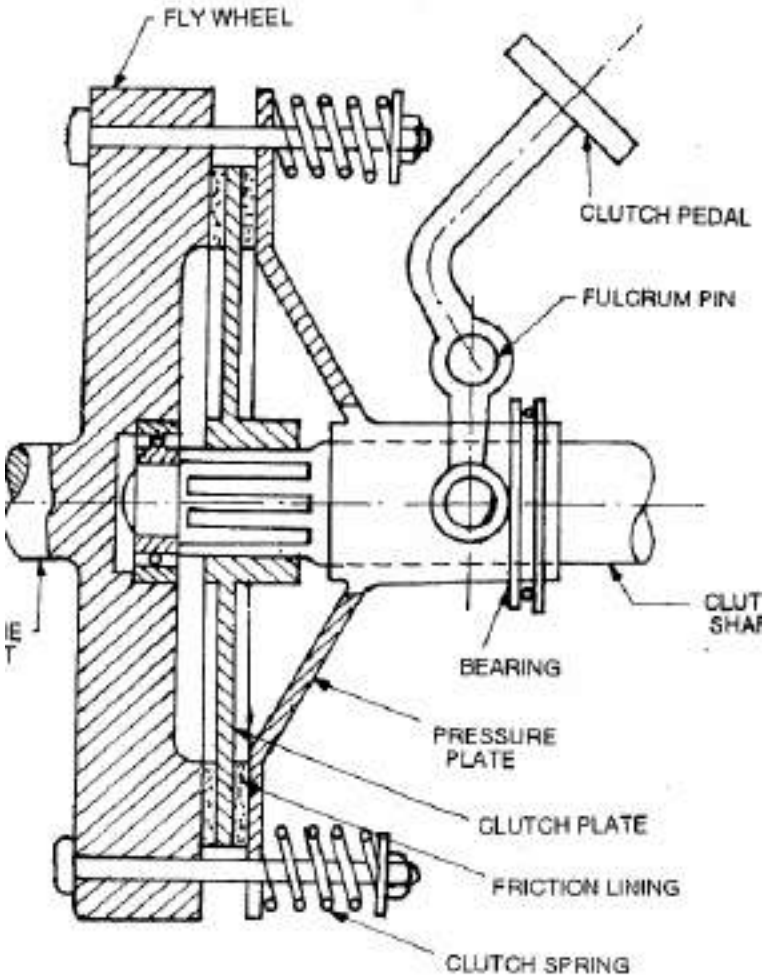

Construction and Working of Multiplate Clutch

- Multi plate clutch consists of a number of clutch plates.
- As the number of clutch plates increased, the friction surfaces also increased.
- the increased number of friction surfaces obviously increases the capacity of the clutch to transmit torque.
- one set of plates slides in grooves on the flywheel and the other set slides on spines on pressure plate hub.
- They are firmly pressed by strong coil springs and assembled in a drum.
- Each of the alternate plate slides in grooves on the flywheel and the other slides on spines on the pressure plate.
- These clutches are used in heavy commercial vehicles, racing cars and motor cycles for transmitting higher torque. Beside these clutches are used in scooters and motor cycles where space available is limited.
- Overall diameter is reduced for the same torque transmission as single plate clutch.

Construction and Working of Multiplate Clutch

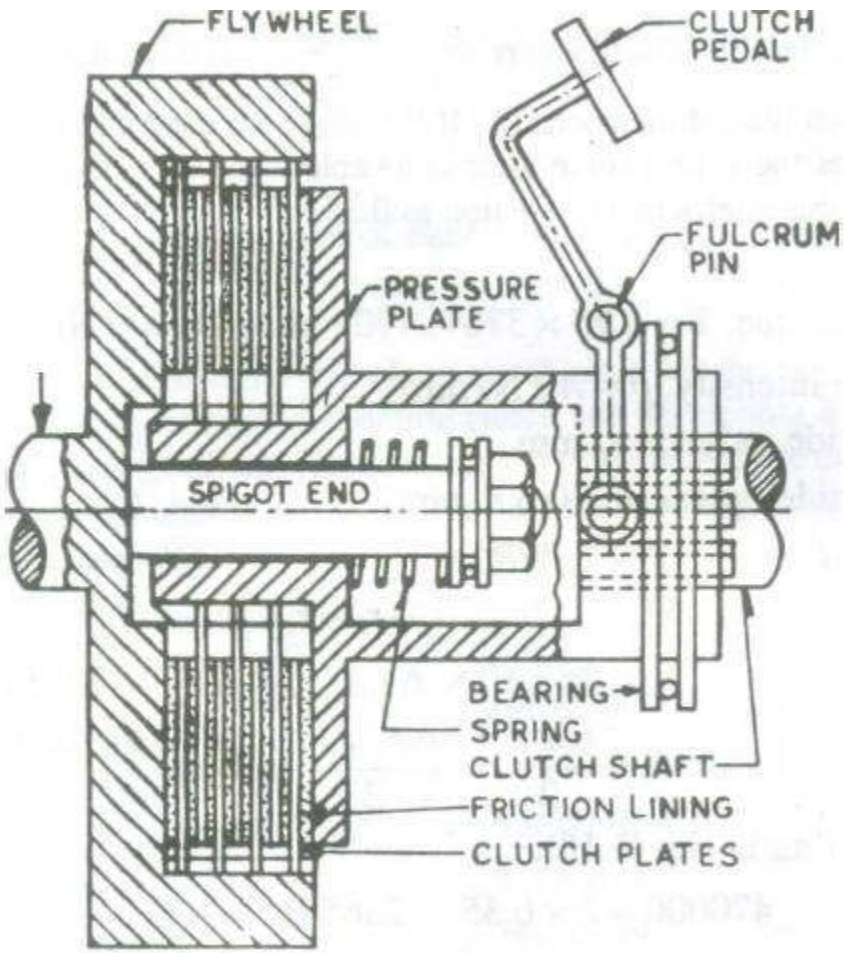

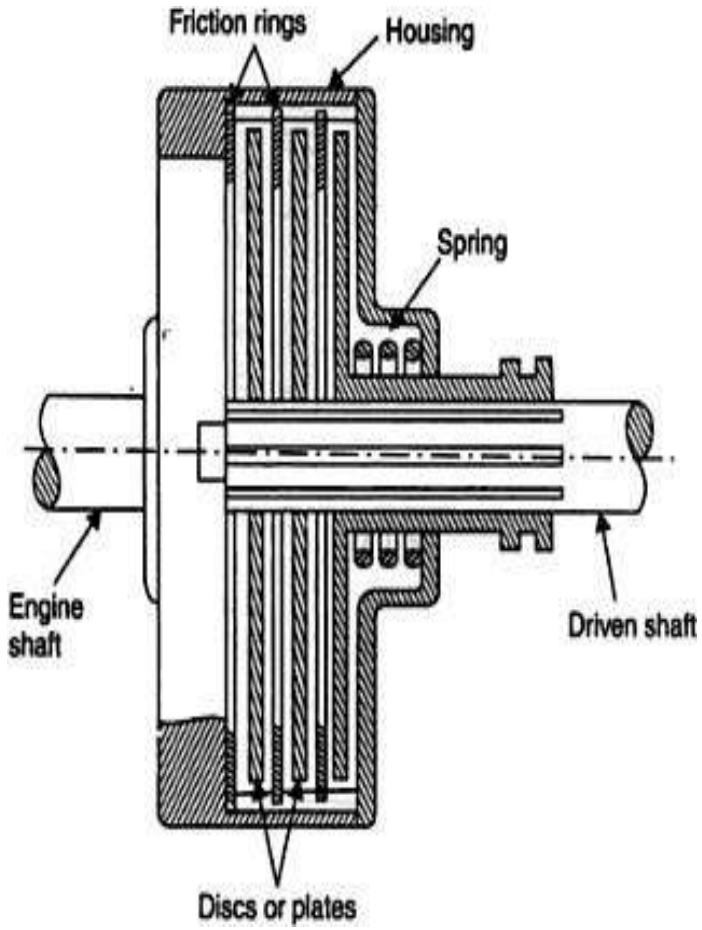

Centrifugal Clutch

- This type of clutch is operated automatically depending upon the engine speed. This means that the vehicle can be stopped in gear without stalling the engine. Similarly while starting, the driver can first select the gear, put the car into the gear and simply press the accelerator pedal. This makes driving operation very easy. This type of clutch is operated by the centrifugal force. This type of clutch is operated automatically depending upon the engine speed. This means that the vehicle can be stopped in gear without stalling the engine. Similarly while starting, the driver can first select the gear, put the car into the gear and simply press the accelerator pedal. This makes driving operation very easy. This type of clutch is operated by the centrifugal force. the bell crank lever 'B' which presses the plate 'C'. This force is transmitted to the plate 'D' by means of springs 'E'. the plate 'D', which contains frictional lining, is thus pressed against the flywheel 'F' there by engaging the clutch. Spring 'G' serves to keep the clutch disengaged at low speed (at about 500 r.p.m). The stop ‘H’ limits the amount of centrifugal force.

Centrifugal Clutch

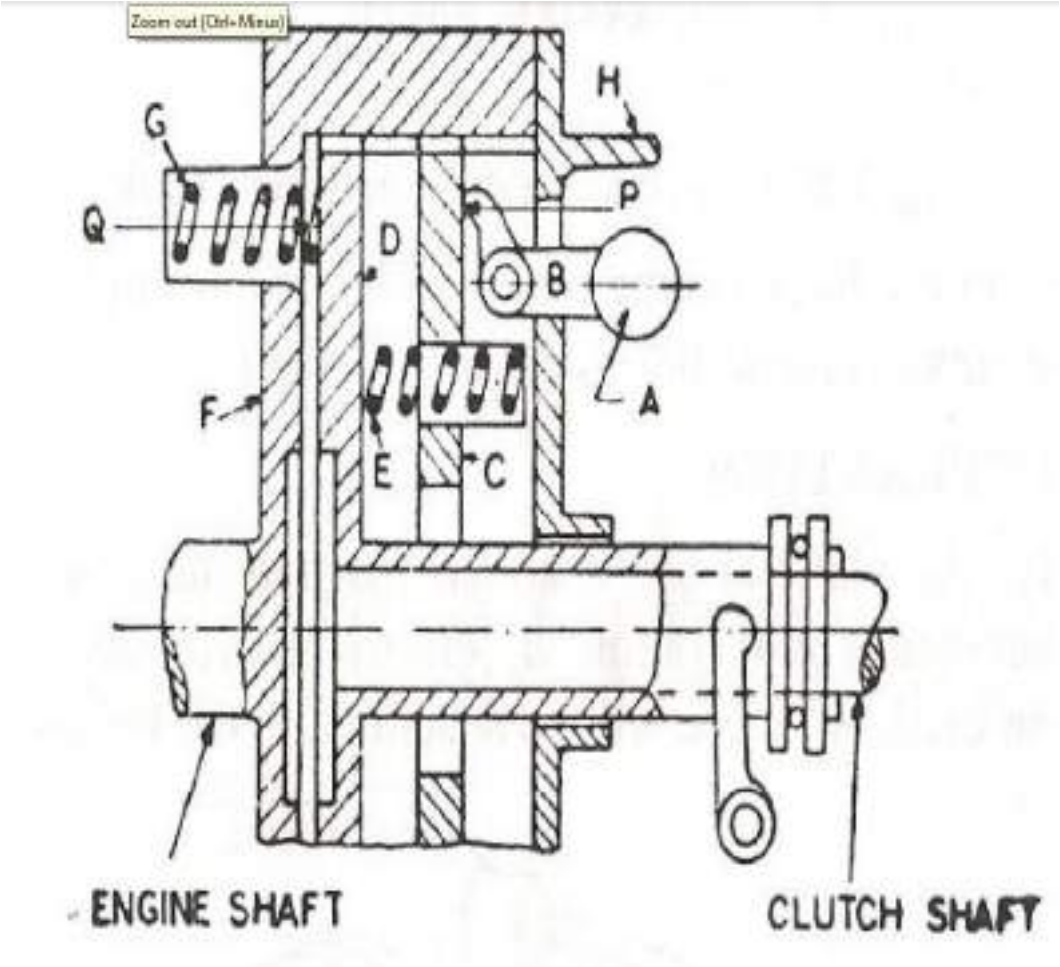

Cone Clutch

- In this type the contact surfaces are in the form of cones as shown in the figure.
- In the engaged position, the male cone is fully inside the female cone so that the friction surfaces are in complete contact.
- This is done by means of springs which keep the male cone pressed all the time. When the clutch is engaged, the torque is transmitted from the engine via the fly wheel and the male cone to the splined gear box shaft.
- For disengaging the clutch the male cone is pulled out by means of the lever system operated through the clutch pedal thereby separating the contact surfaces.

➢ **Advantage**

- The only advantage of the cone clutch is that the normal force acting on the contact surfaces in this case is larger than the axial force, as compared to the simple single plate clutch in which the normal force acting on the contact surfaces is equal to the axial force.

Cone Clutch

Disadvantages:

This type of clutch is practically obsolete because of certain inherent disadvantages:

- If the angle of cone is made smaller than about 20° the male cone tends to bind or join in the female cone and it becomes difficult to disengage the clutch.
- A small amount of wear on the cone surface results in a considerable amount of the axial movement of the male cone for which it will be difficult to allow

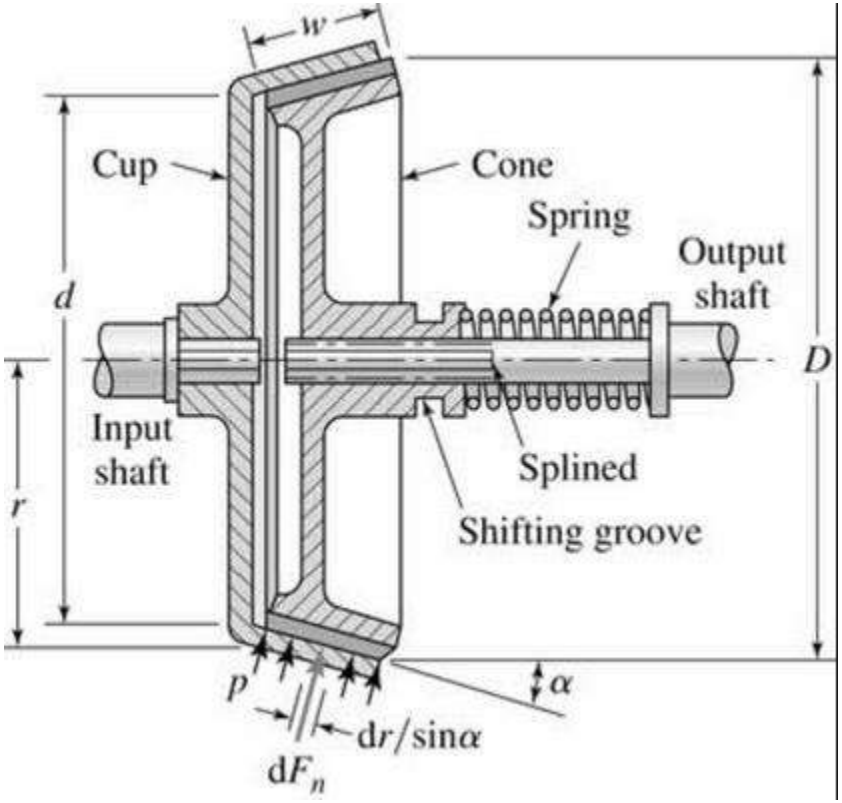

Electromagnetic Clutches

- This type of clutch has been employed on some Renault cars. The construction and working of this clutch may be understood by means of simplified Fig.
- ‘A’ is the engine flywheel incorporating the winding ‘B’. Clutch plate ‘C’ is lined with friction surfaces and is free to slide on splines on the clutch shaft.
- ‘D’ is the pressure plate. The winding ‘B’ is supplied with current from battery dynamo. When the winding ‘B’ is energized, it attracts the pressure plate ‘D’, thereby engaging the clutch.
- When supply to winding ‘B’ is cut off, the clutch is disengaged. There is a clutch release switch in the gear lever. This switch is operated as soon as the driver holds the gear lever to change the gear, cutting off current to the winding and thus causing clutch disengagement.
- Ordinarily the winding is connected to engine dynamo. At lower engine speeds, dynamo output is also low which makes the force in winding very small.

Electromagnetic Clutches

- Three springs are also provided in the clutch (not shown) to balance this reduced electromagnetic force at low speeds, thus disengaging .the clutch.
- During normal operation, the electromagnetic force of the winding is regulated by means of an electrical resistance, which itself is controlled by means of accelerator pedal. As the acceleration pedal is pressed the resistance is gradually cut, thus increasing the electromagnetic force.
- The electromagnetic type of clutch is best suited where remote operation is desired since no linkages are required to control its engagement.
- disadvantage is its higher initial cost.

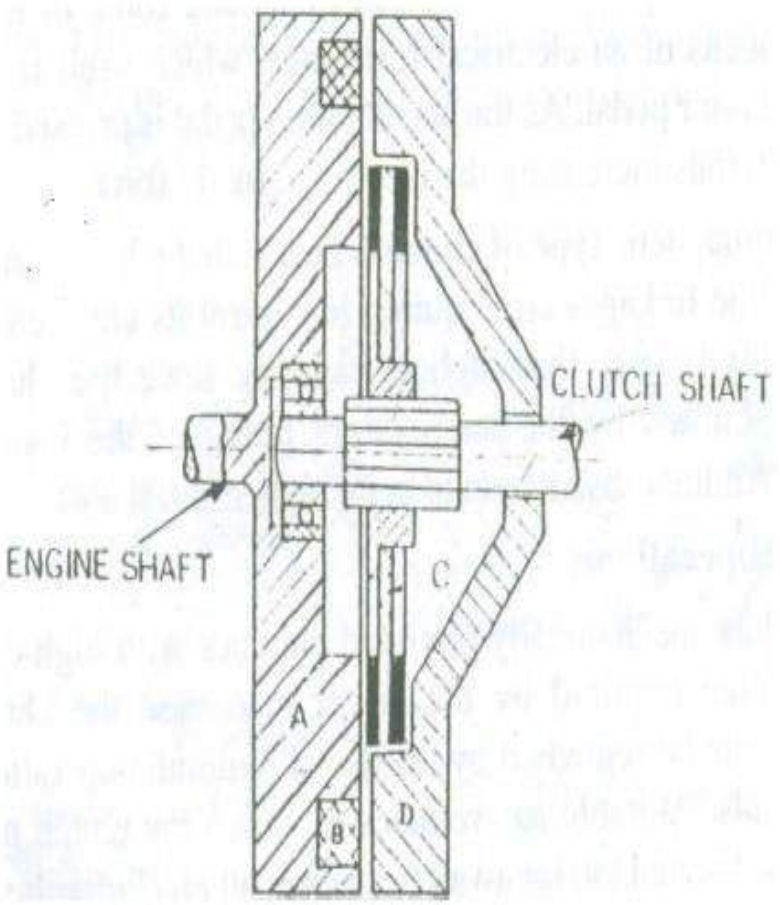

Diaphragm Spring Clutch

- Diaphragm spring pressure plate assemblies are widely used in most modern cars.
- The diaphragm spring is a single thin sheet of metal which yields when pressure is applied to it.
- When pressure is removed the metal springs back to its original shape.
- The centre portion of the diaphragm spring is slit into numerous fingers that act as release levers.
- During disengagement of the clutch the fingers are moved forward by the release bearing.
- The spring pivots over the fulcrum ring and its outer rim moves away from the flywheel.
- The retracting spring pulls the pressure plate away from the clutch plate thus disengaging the clutch.
- When engaged the release bearing and the fingers of the diaphragm spring move towards the transmission.
- As the diaphragm pivots over the pivot ring its outer rim forces the pressure plate against the clutch disc so that the clutch plate is engaged to the flywheel.

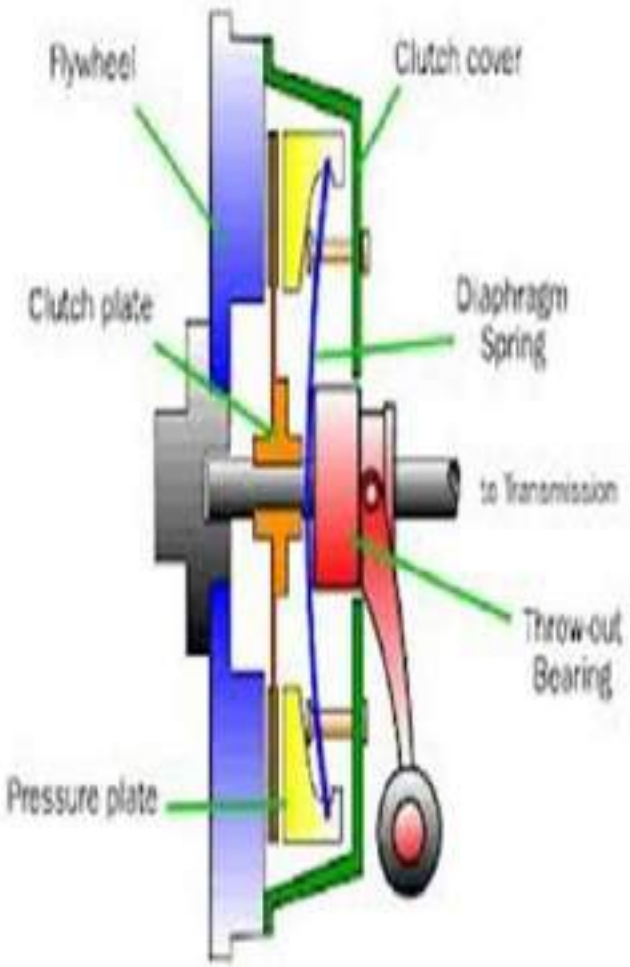

Diaphragm Spring Clutch

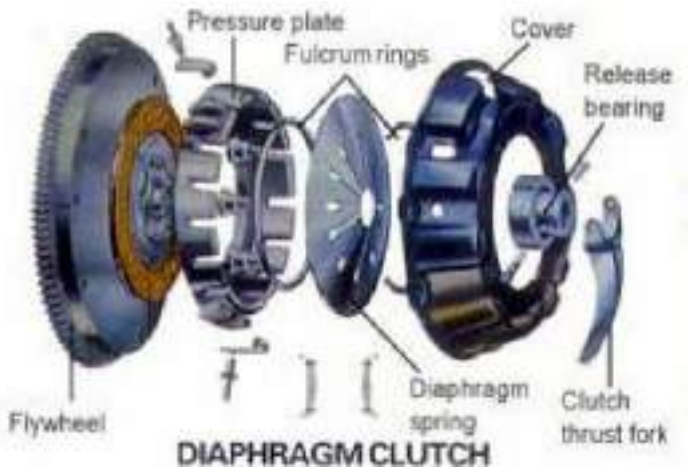

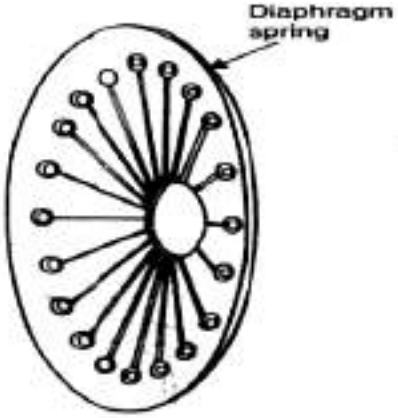

. Diaphragm spring used in diaphragm spring clutch.

ADVANTAGES OF DIAPHRAGM SPRING CLUTCH

1. It is more compact than other designs.
2. It is easier to balance rotationally and is less subjected to unwanted effects due to centrifugal force at high rotational speeds.
3. It gives uniformly distributed pressure on pressure plate.
4. It needs no release levers.
5. Minimum effort is sufficient to disengage the clutch.
6. It provides minimum number of moving components and hence minimum internal friction is experienced.
7. This is very commonly used in cars, light Lorries and mini trucks but is not much used in heavy vehicles

Lining Material

- Clutch linings are a type of friction material; a clutch is used to transfer the motion of one mechanical component to another by keeping two surfaces in contact. The clutch lining is what prevents these two surfaces from slipping.
- Today's clutch linings are usually made from fiberglass, kevlar or some type of metal. Throughout most of the 20th century however, clutch linings were made from asbestos.

➢Common Clutch Facing Materials:

Organic friction materials are the most common types of clutch facing materials. Examples are :

(a) Leather: Dry leather on iron has coefficient in friction of 0.27.
(b) Cork: Cork on dry steel or iron has coefficient of friction of 0.32.
(c) Fabric: Good quality fabric materials have coefficient of friction of about 0.4. But they cannot be used at high temperatures.
(d) Asbestos : Asbestos facing have coefficient of friction of about 0.2. However it has got anti-heat characteristics.
(e) Reybestos and Ferodo: These have a coefficient of friction of about 0.35 and are most suitable as friction facings. They are almost universally used for clutch facings

Clutch Control Systems

1. Pressure Plate
2. Release levers
3. Cover
4. Straps
5. Springs
6. Throwout Bearing

(Note: For detail study refer book.)
Along with these theories I will also provide you videos which we go through in class.

AUTOMOBILE ENGINEERING

2

Gear Box

By: PULKIT AGRAWAL

Assistant professor

Mechanical Engg. Dept.

TRANSMISSION SYSTEM

- Clutch
- Gear box
- Universal joints
- Propeller shaft
- Differential gears
- Axial
- Wheel

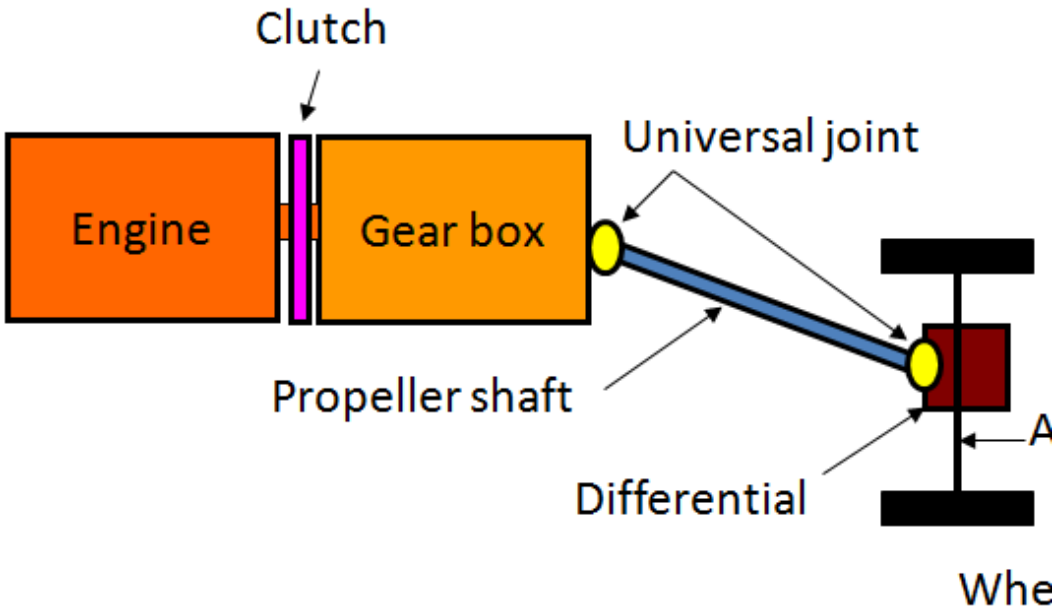

POWER TRAIN

Necessity of Gear Box

- The gear box is necessary in the transmission system to maintain engine speed at the most economical value under all conditions of vehicle movement. An ideal gear box would provide an infinite range of gear ratios, so that the engine speed should be kept at or near that the maximum power is developed what ever the speed of the vehicle.

- The purpose of gear box is to provide high torque at the time of starting, hill climbing, accelerating and pulling a load. The vehicle will have to face the resistances like wind resistance, gradient resistance and rolling resistance. The tractive effort of the vehicle can be available at various speeds.

Function of Gear Box

- Torque ratio between engine and wheel to be varied for rapid acceleration and for climbing gradient.

- The transmission also provides a neutral position so that the engine & the road wheels are disconnected even with the clutch in the engaged position.

- A means to back the car by reversing the direction of rotation of the drive is also provided by the transmission.

Resistance to Motion of Vehicle

- Total resistance to the vehicle motion consists of:

(i) Resistance due to wind: this is taken to be proportional to the square of the vehicle speed.

(ii) Resistance due to gradient: this remains constant at all speeds. This is the component of the vehicle weight parallel to the plane of the road.

(iii) Miscellaneous: apart from the above two types various other factors also contribute towards the vehicles resistance. These are: type of the road, tyre friction etc.

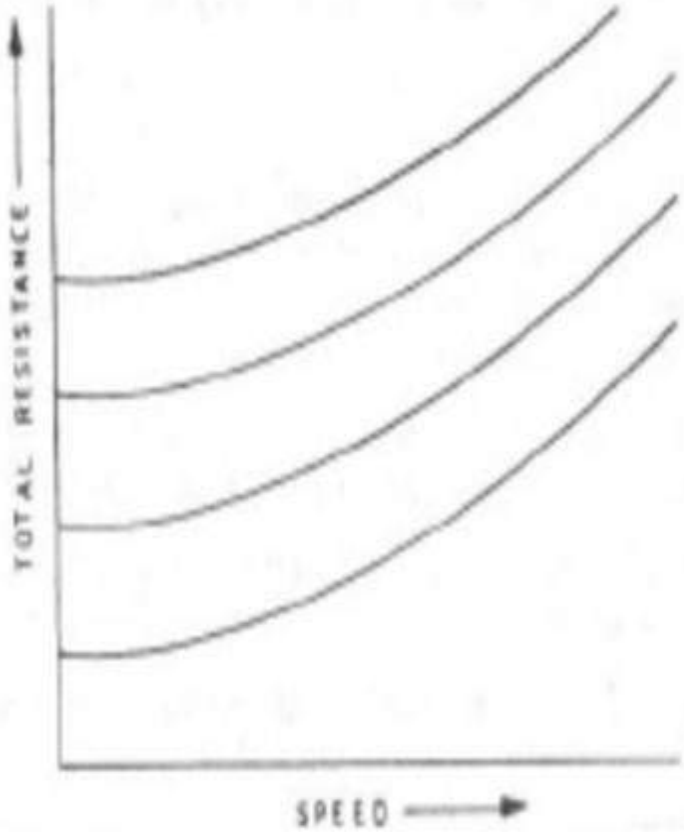
TOTAL RESISTANCE
SPEED

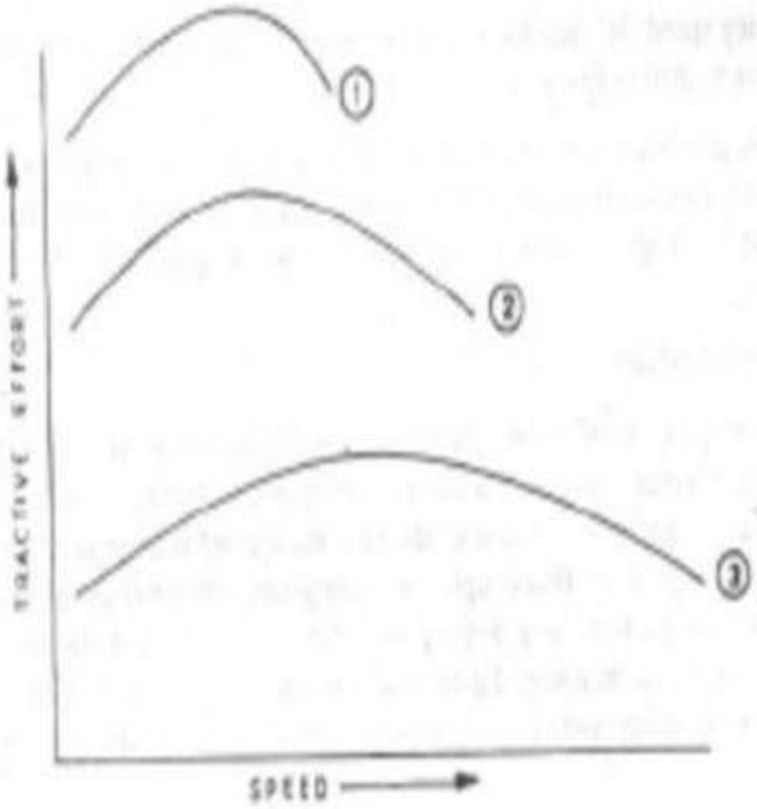
TRACTIVE EFFORT
SPEED
1
2
3

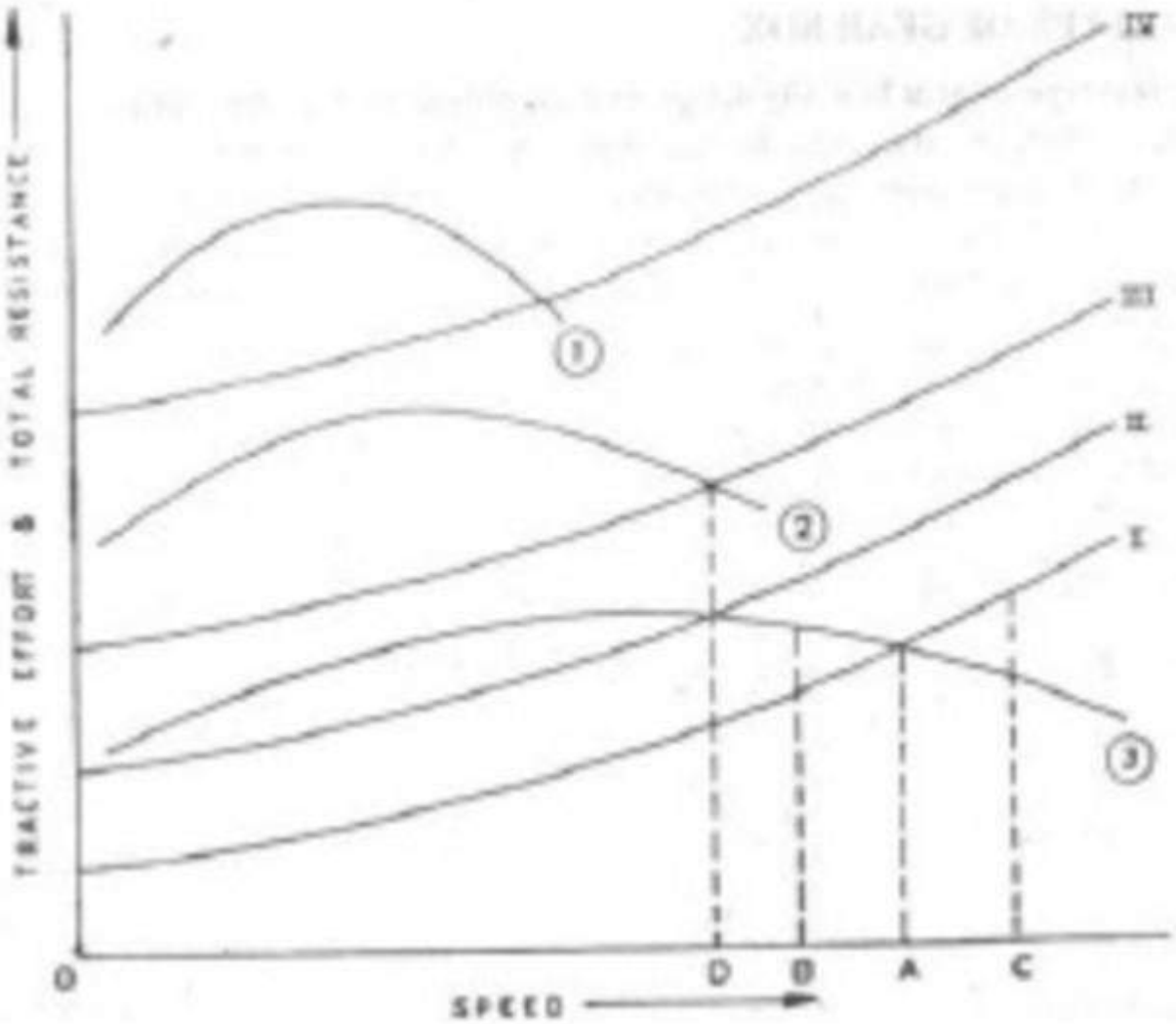
TRACTIVE EFFORT & TOTAL RESISTANCE
SPEED
O
D
B
A
C
IV
III
II
I
1
2
3

Types of Gear Box

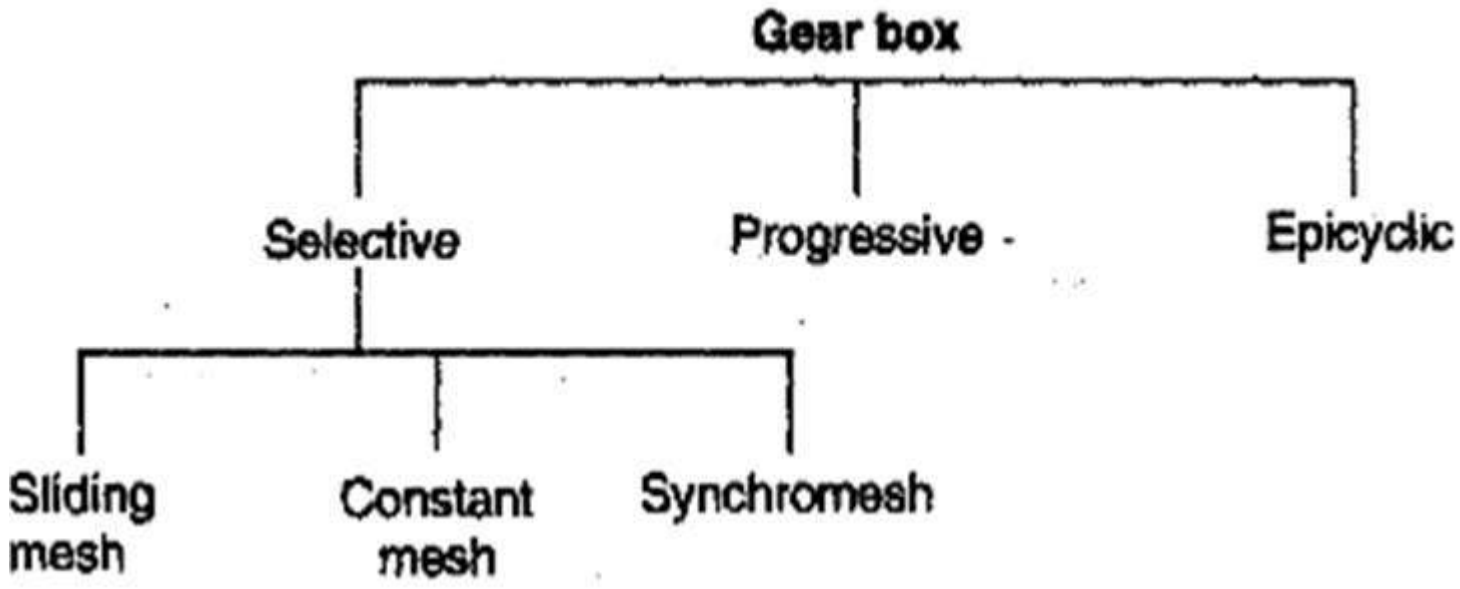

Selective Type Gear Box

- In this type of transmission, neutral position has to be obtained before selecting any forward or reverse position.

➢ Advantages:

- Simple in construction.
- Less maintenance
- Light & small
- Low production cost.

➢ Disadvantages:

- Noisy in operation
- Gear ratio not being continuous but being in steps (3 to 5 steps), making it necessary to shift gears each time when vehicle running condition change.

Sliding Mess Gear Box

- It is the simplest and oldest type of gear box.
- The clutch gear is rigidly fixed to the clutch shaft.
- The clutch gear always remains connected to the drive gear of countershaft.
- The other lay shaft gears are also rigidly fixed with it.
- Two gears are mounted on the main shaft and can be sliding by shifter yoke when shifter is operated.
- One gear is second speed gear and the other is the first and reverse speed gears. All gears used are spur gears.
- A reverse idler gear is mounted on another shaft and always remains connected to reverse gear of counter shaft.
- Spur gears are used in sliding mess gear box.

Sliding Mess Gear Box

- FIRST GEAR : By operating gearshift lever, the larger gear on main shaft is made to slide and mesh with first gear of countershaft. The main shaft turns in the same direction as clutch shaft in the ratio of 3:1.
- SECOND GEAR : By operating gear shaft lever, the smaller gear on the main shaft is made to slide and mesh with second gear of counter shaft. A gear reduction of approximately 2:1 is obtained.
- TOP GEAR : By operating gearshift lever, the combined second speed gear and top speed gear is forced a:dally against clutch shaft sear. External teeth on clutch gear mesh with internal teeth on top gear and the gear ratio is 1:1.
- REVERSE GEAR: By operating gearshift lever, the larger gear of main shaft is meshed with reverse idler gear. The reverse idler gear is always on the mesh with counter shaft reverse gear. Interposing the idler gear. between reverse and main shaft gear. the main shaft turns in a direction opposite to clutch shaft.
- NEUTRAL GEAR: When engine is running and the clutch is engaged. clutch shaft gear drives the drive gear of the lay shaft and thus lay shaft also rotates. But the main shaft remains stationary as no gears in main shaft are engaged with lay shaft gears.

Sliding Mess Gear Box

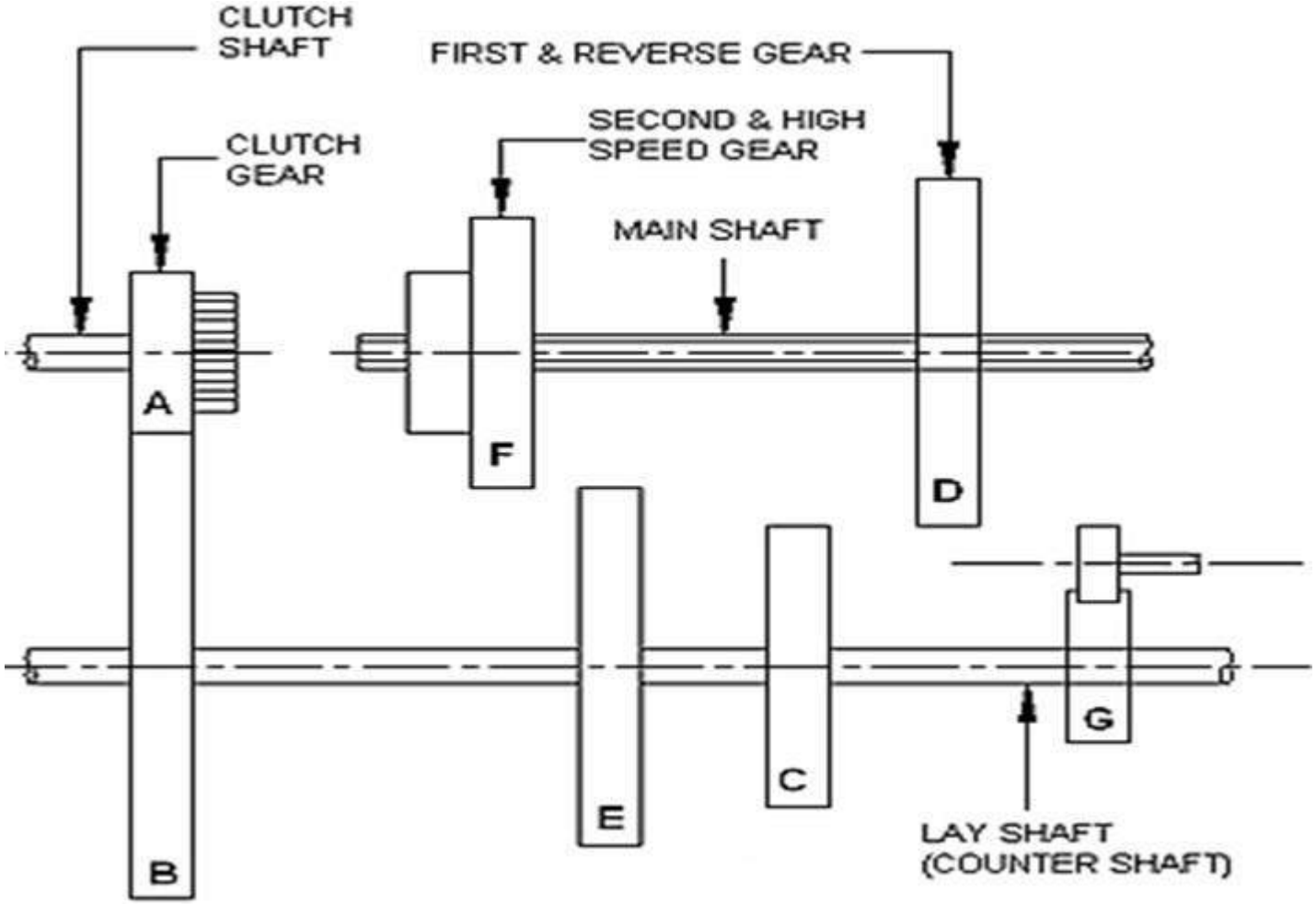

Constant Mess Gear Box

- In this type of gear box, all the gears are in constant mesh with the corresponding gears on the lay shaft. The gears on the main shaft which is splined are free (Fig). The dog clutches are provided which are free to slide on the main shaft. The gears on the lay shaft are, however, fixed. When the left dog clutch is slid to the left by means of the selector mechanism, its teeth are engaged with those on the clutch gear and we get (the direct gear. The same dog clutch, however, when slid to right makes contact with the second gear and second gear is obtained. Similarly movement of the right dog clutch to the left results in low gear and towards right in reverse gear.
- Helical gears are used in this type of gear box.

Constant Mess Gear Box

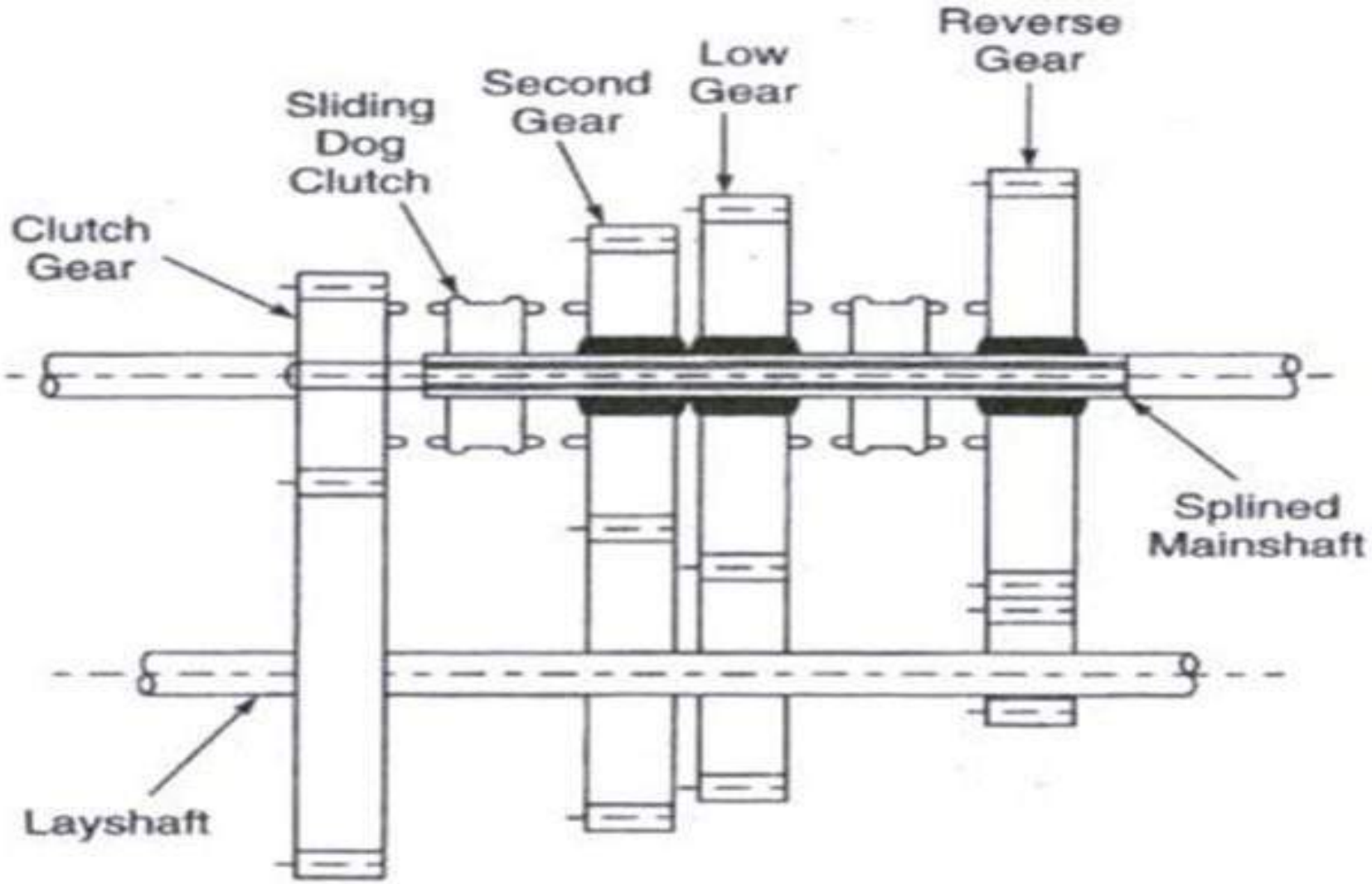

Constant Mess Gear Box

- Advantage:

➢ In constant mess type of gear box, because all the gears are in constant mesh, they are safe from being damaged & unpleasant grinding sound does not occur while engaging & disengaging.

Double Declutching

- In the constant mesh box, for the smooth engagement of the dog clutches it is necessary that the speed of main shaft gear and the sliding dog must be equal.
- Therefore to obtain lower gear, the speed of the clutch shaft, lay shaft and main shaft gear must be increased. This is done by double declutching.
- The procedure for double declutching is as given below:

➢ The clutch is disengaged and the gear is brought to neutral.

➢ Then the clutch is engaged and accelerator pedal pressed to increase the speed of the main shaft gears.

➢ After this the clutch is again disengaged and the gear moved to the required lower gear and the clutch is again engaged.

➢ As the clutch is disengaged twice in this process, it is called double declutching.

Synchromesh Gear Box

- This type of gear box is similar to the constant mesh type in that all the gears on the main shaft are in constant mesh with the corresponding gears on the lay shaft. The gears on the lay shaft are fixed to it while those on the main shaft are free to rotate on the same.
- Its working is also similar to the constant mesh type, but in the former there is one definite improvement over the latter. This is the provision of synchromesh device which avoids the necessity of double declutching. The parts which ultimately are to be engaged are first brought into frictional contact which equalizes their speed, after which these may be engaged smoothly.
- Synchromesh devices are fitted only on the high gears and on the low and reverse gears ordinary dog clutches are only provided. This is done to reduce the cost.

Synchromesh Gear Box

- An automatic arrangement for matching the speeds of engaging dogs is called synchromeshing. The gear box employing such an arrangement is termed as synchromesh gear box. The synchronizing between engaging dog & appropriate gear is achieved by a synchronizing assembly called synchronizer.
- The construction & working principle of a typical synchronizer is shown in fig 5.7. it consist of mainly three parts:

(i) A ring having internal teeth

(ii) Synchromesh cones, male C & female D

(iii) Toothed dogs A & B

- The ring is normally held in place by spring loaded balls. It rotates with the output shaft & also be slided along the splines cut on the shaft.
- Figure 5.7 a shows disengaged position. Neither the male synchronizer cone C mesh with its female one D, nor the male toothed dog A overrides the female toothed dog B.
- the input shaft, layshaft & gears are running free.

Synchromesh Gear Box

- Now when the selector is moved in the direction shown in fig 5.7 b, the synchronizer cone C & D comes in to contact & the friction between them either speed up or slows down the gear E w.r.t the out put shaft.
- A further movement to the selector causes to the dog A & B to override by overcoming spring loaded balls, & thus the gear E is locked to the output shaft, we call it a situation of gear engagement.

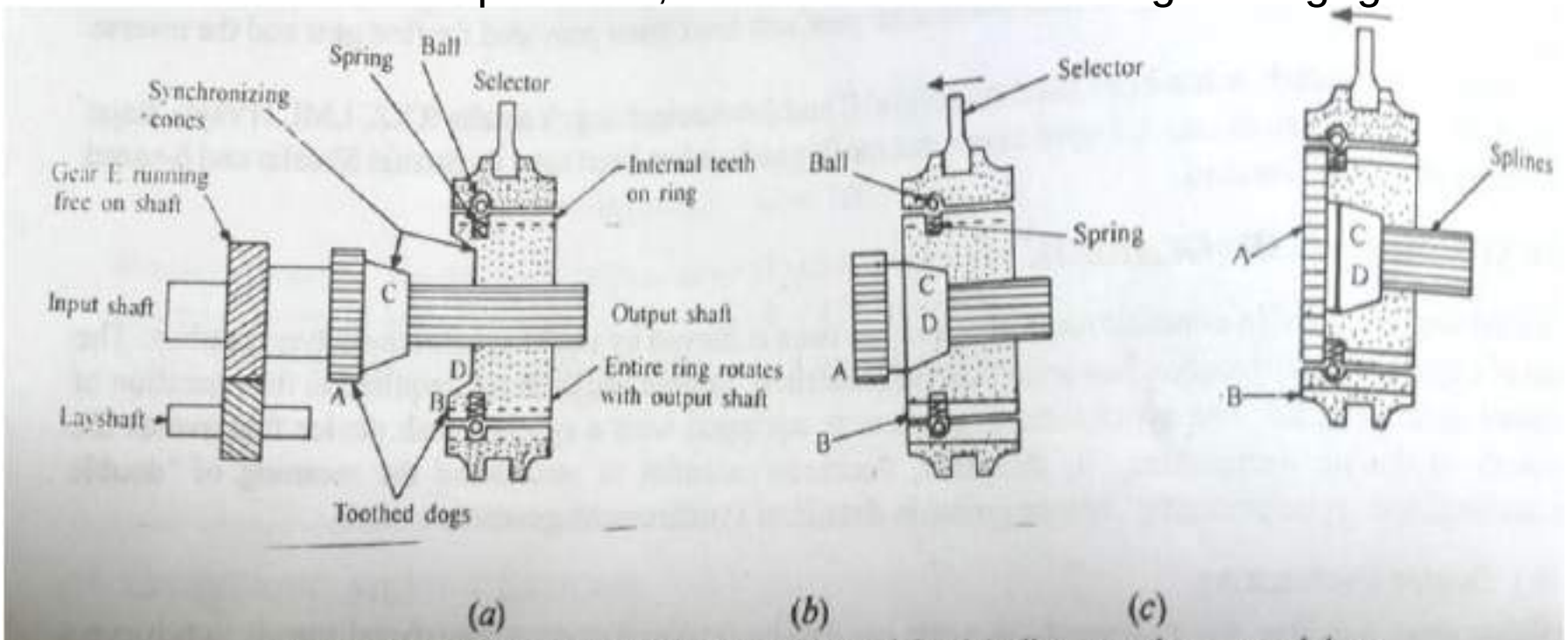

Fig. 5.7 Working of synchronizing assembly explains (*a*) disengaged cones and dogs, (*b*) engaged cones but disengaged dogs, and (*c*) engaged cones and dogs, on moving a selector.

Mechanism with gear lever on top of transmission case

- There are forks mounted on the sleeves on three separate selector rods which are supported in the gearbox casing.
- Each selector sleeve can slide on its rod.
- There are slots on the selector rods and the sleeves are provided with spring loaded balls to avoid unwanted engagement of the gears.
- These balls resist the movement of the forks until some force is applied to the gear lever to overcome their resistance.
- Grooves are provided on the gear bosses where the selector forks can fit in.
- Transverse motion of the gear lever selects the forks which is to be engaged and the longitudinal movement then slides the forks and its gear to engage the selected gear.

(Note- Numerical on the sliding and constant mesh and for vehicle resistances concept has been done in the class and will proide you the same in your whatsapp group)

AUTOMOBILE ENGINEERING

3

Transmission with Fluid Flywheel & Torque converter

BY: PULKIT AGRAWAL

ASSISTANT PROFESSOR

MECHANICAL ENGG. Dept.

Fluid flywheel

- Fluid flywheel or hydraulic coupling or fluid coupling as it is frequently called has been used in cars employing automatic transmission.
- It consist of two members, the driving and driven . The driving member is attached to the engine flywheel and the driven member to the transmission shaft. The two members do not have any direct contact with each other. The two rotors are always filled with fluid of suitable viscosity.

Fluid flywheel

- Working: there are two cups as shown in figure. One cup called impeller is fitted with the crankshaft. Another cup called turbine is fitted with the transmission shaft. There is oil in the coupling.
- When the crankshaft rotates the impeller also rotates. The centrifugal force acts on the oil between the vanes of the impeller due to which this oil is thrown into turbine. As a result of this, the turbine is forced to rotate. Thus the engine power is transmitted from the crankshaft to the transmission shaft.

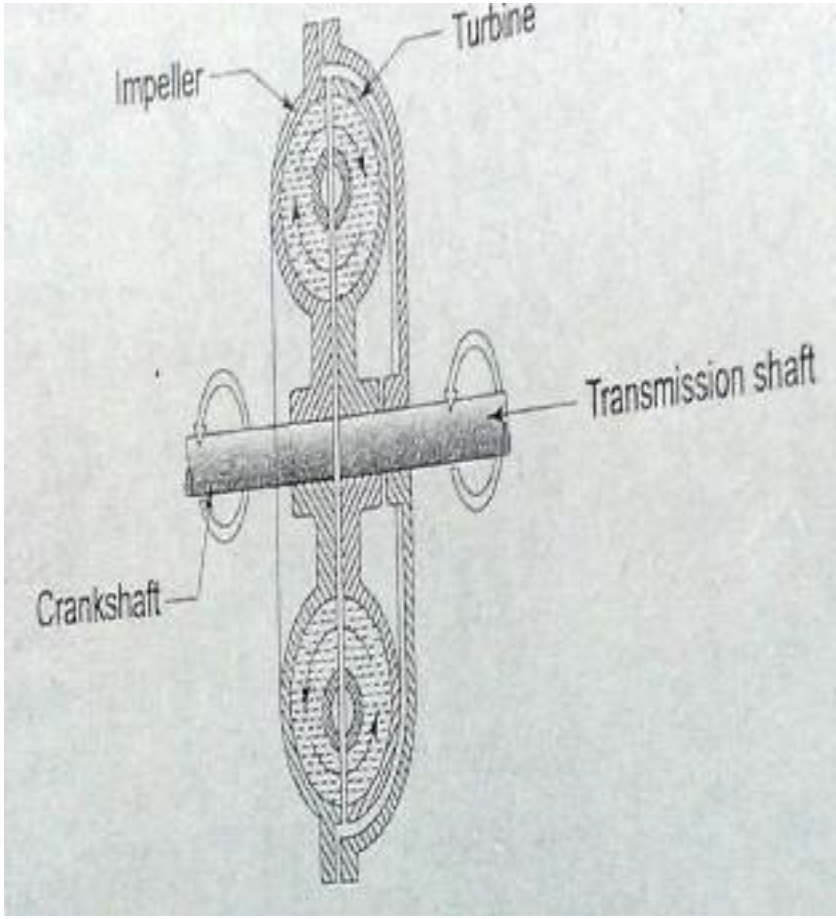

Fluid flywheel

- Advantages:

(i) No wear on moving parts.

(ii) No adjustment is necessary.

(iii) Car can stop in gear and move off also by pressing accelerator pedal only.

(iv) Simple design.

(v) No maintenance necessary except oil level.

(vi) No skill required for operating it.

- Disadvantages:

(i) The fluid coupling is generally used with epicyclic gear box only. It cannot be used with the ordinary crash type gear box due to difficulty while changing gears.

Fluid flywheel characteristics

. Characteristics

Fig. 3.53 shows the variation of percentage slip with speed. The percentage slip is defined as $\frac{N_1 - N_2}{N_1} \times 100$ where N_1 and N_2 are the speeds of driving and driven members respectively. It is seen that for engine speeds below about 500 r.p.m. (fixed by the designer), percentage slip is 100 which means clutch is fully disengaged. As the engine speed increases further to about 1000 r.p.m., the percentage slip falls rapidly to about 10, beyond which the slip decreases gradually to a small value of about 2 per cent at about 3000 r.p.m. As percentage slip represents definite loss of energy and consequently increased fuel consumption, the engine should not be allowed to run at a speed between approximately 500 and 1000 r.p.m. This condition is similar to a slipping clutch in case of ordinary friction clutches.

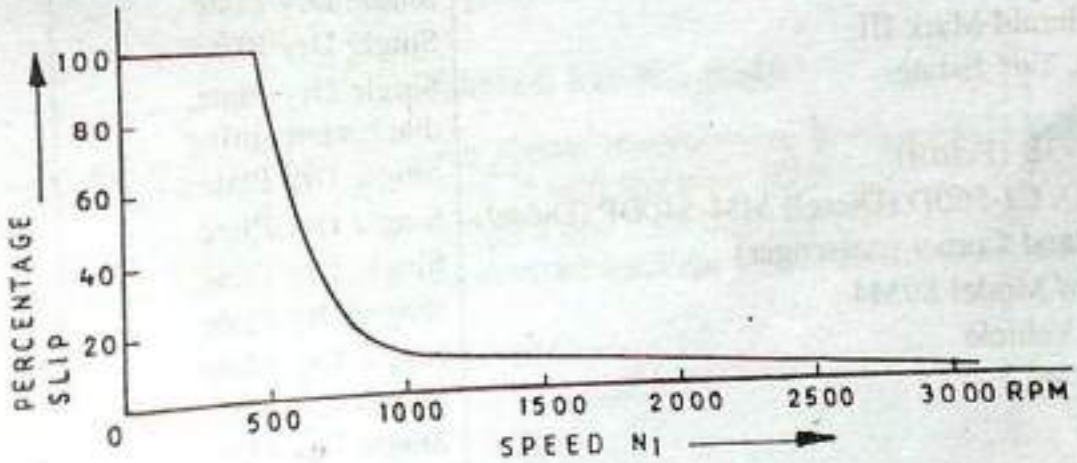

Fig. 3.53. Fluid flywheel Characteristics

Torque converter

Role of the torque converter:

- Multiplies torque generated by the engine.
- Serves as an automatic clutch which transmits engine torque to the transmission.
- Absorbs torsional vibration of the engine and drivetrain.
- Smoothes out engine rotation.
- Drives the oil pump of the hydraulic control system.

The torque converter is filled with automatic transmission fluid, and transmits the engine torque to the transmission. The torque converter can either multiply the torque generated by the engine or function as a fluid coupling.

Torque Converter Components

The torque converter's three major components are; the pump impeller, turbine runner and the stator. The pump impeller is frequently referred to as simply the impeller and the turbine runner is referred to as the turbine.

Pump Impeller

The impeller is integrated with the torque converter case, and many curved vanes that are radially mounted inside. A guide ring is installed on the inner edges of the vanes to provide a path for smooth fluid flow.

When the impeller is driven by the engine crankshaft, the fluid in the impeller rotates with it. When the impeller speed increases, centrifugal force causes the fluid to flow outward toward the turbine.

Turbine Runner

The turbine is located inside the converter case but is not connected to it. The input shaft of the transmission is attached by splines to the turbine hub when the converter is mounted to the transmission. Many cupped vanes are attached to the turbine. The curvature of the vanes is opposite from that of the impeller vanes. Therefore when the fluid is thrust from the impeller, it is caught in the cupped vanes of the turbine and torque is transferred to the transmission input shaft, turning it in the same direction as the engine crankshaft.

Stator

The stator is located between the impeller and the turbine. It is mounted on the stator reaction shaft which is fixed to the transmission case. The vanes of the stator catch the fluid as it leaves the turbine runner and redirects it so that it strikes the back of the vanes of the impeller, giving the impeller an added boost or torque. The benefit of this added torque can be as great as 30% to 50%.

The one-way clutch allows the stator to rotate in the same direction as the engine crankshaft. However, if the stator attempts to rotate in the opposite direction, the one-way clutch locks the stator to prevent it from rotating. Therefore the stator is rotated or locked depending on the direction from which the fluid strikes against the vanes.

Torque converter working operation

When the impeller is driven by the engine crankshaft, the fluid in the impeller rotates in the same direction. When the impeller speed increases, centrifugal force causes the fluid to flow outward from the center of the impeller and flows along the vane surfaces of the impeller. As the impeller speed rises further, the fluid is forced out away from the impeller toward the turbine. The fluid strikes the vanes of the turbine causing the turbine to begin rotating in the same direction as the impeller.

After the fluid dissipates its energy against the vanes of the turbine, it flows inward along the vanes of the turbine. When it reaches the interior of the turbine, the turbine's curved inner surface directs the fluid at the vanes of the stator, and the cycle begins again.

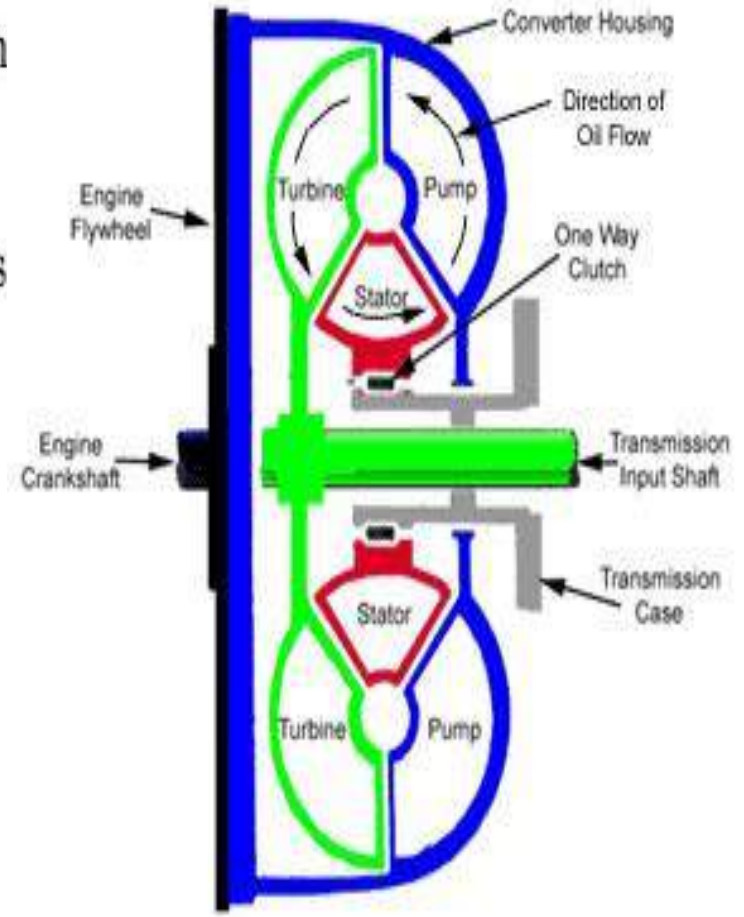

➢ Torque converter fluid flow:

- Following types of flow developed during operation of converter:

a. Vortex flow occurs while vehicle is accelerating (impeller turning faster than turbine).

b. Rotary flow occurs while vehicle is crusing (impeller and turbine at all most same speed).

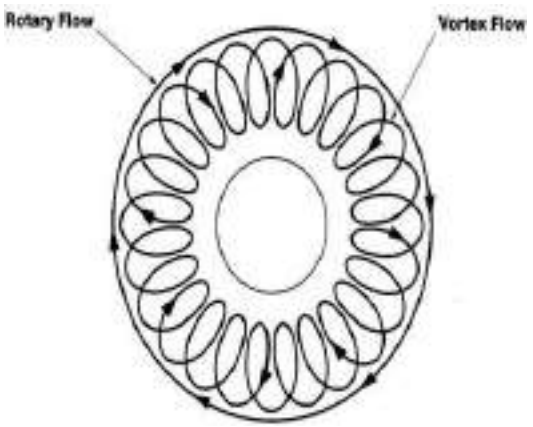

➢ Phases of operation:

a. Torque multiplication:
- Relatively low impeller (engine) RPM's
- Stator is locked into place by its one-way clutch
-Vortex fluid flow within the converter

b. Coupling phase:
- Occurs at normal driving conditions
- No torque multiplication
- Stator is freewheeling
- Turbine is spinning at approx 90% of impeller speed
- Rotary flow within the converter

Torque converter performance characteristic

- Figure shows the variation of the ratio output torque/input torque & efficiency with the speed of the driven member. It is observed that the efficiency of the torque converter is maximum within a very narrow speed range. Because of this the use of torque converter will involve heavy losses.
- To avoid these losses centrifugal clutch lock up torque converter can be employed.

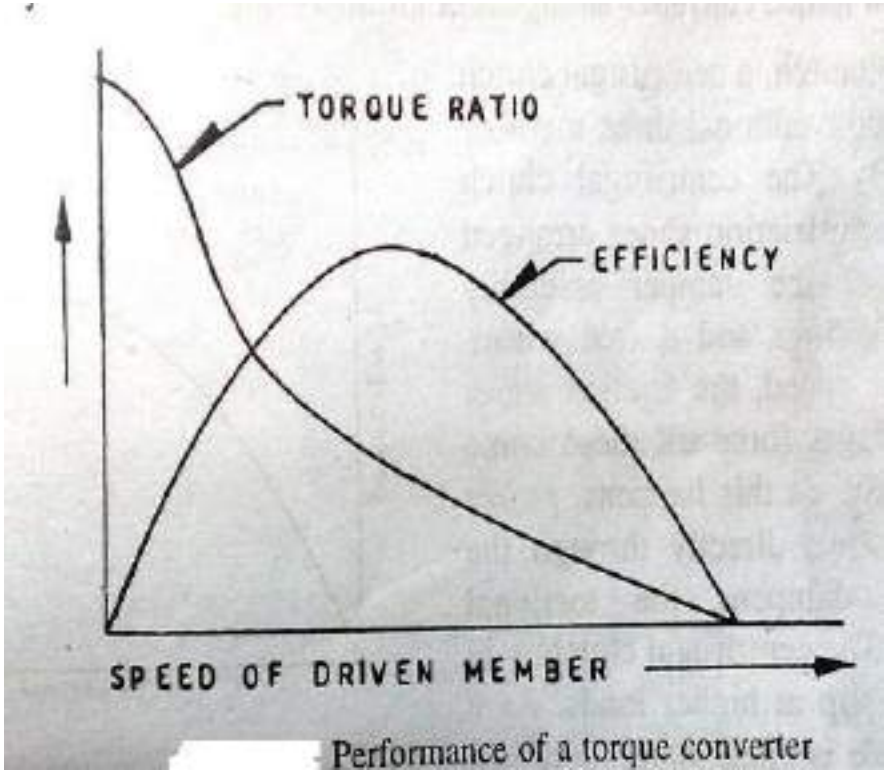

Performance of a torque converter

Overdrives

In the top gear position, it is direct drive between the clutch shaft and the main shaft of the gear box. The gear ratio is 1 : 1 in this position. Through this transmission, there is neither gear reduction nor gear increase.

Sometimes, at high speeds, the main shaft of the gear box should necessarily turn faster than the clutch shaft. In this case the overdrive gear unit plays an important part.

The transmission is in overdrive, when the main shaft of the gear box is turning faster than the clutch shaft.

The overdrive is fitted to the rear of the gear box between the gear box and the propeller shaft. It is described below.

Construction

There are two shafts in the overdrive, namely the input and the output shaft. The main shaft of the gear box becomes the input shaft of the overdrive. The output shaft of the overdrive is connected to the propeller shaft.

There is an epicyclic train in which the sun gear is free to rotate on the input shaft. The carrier can move on splines on the input shaft. A free wheel clutch is also attached on these splines. The ring is connected to the output shaft.

Operation

When the sun gear is locked with the casing, it becomes stationary. In this situation, overdrive is engaged, thus increasing the speed of the output shaft.

When the sun gear is locked to the carrier, solid drive through the gear train is achieved. That is, normal direct drive is obtained. The same effect happens when the sun gear is locked to the ring.

Overdrives

Advantages

The overdrive permits an engine at lower speed to maintain the car at high speed. When the car is moving at a steady speed, it does not require as much power to keep it moving.

As a result, the engine can run slower, produce power less than what is required, and still maintain the same car speed. Thus the fuel used by the car is saved and wear on the engine and accessories is reduced.

For example, when a car without the overdrive runs at 60 km per hour, assume that the engine crankshaft revolves at 1900 per minute. Suppose the same car runs with overdrive at 60 km per hour. Now the crankshaft of the engine will revolve only at 1300 per minute. This indicates that due to the overdrive, the revolution of the engine crankshaft is reduced from 1900 to 1300 per minute for the same speed. This saves a lot of fuel.

Another example is that of a typical overdrive gear box which can maintain a car at a speed of 89 km per hour while allowing the engine to turn at the equivalent of only 71 km per hour. Thus the consumption of fuel by the car is reduced.

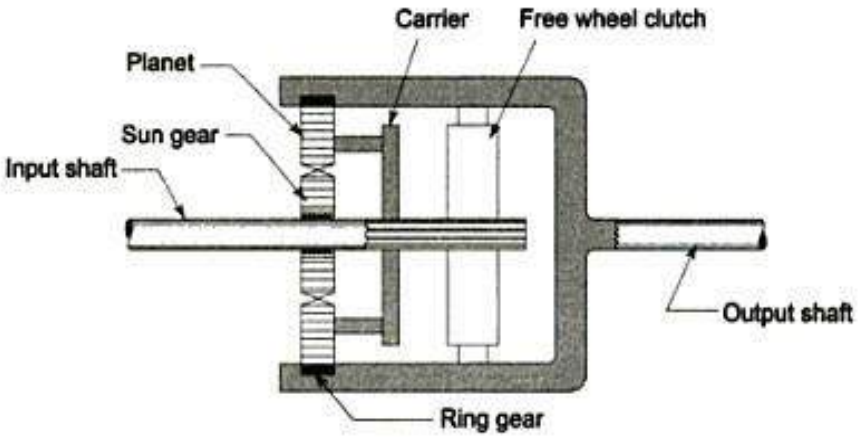

Overdrive

AUTOMOBILE ENGINEERING

4

Semi-Automatic & Automatic transmission

BY : PULKIT AGRAWAL
ASSISTANT PROFESSOR
MECHANICAL ENGG. Dept.

- A **semi-automatic transmission** (SAT) (also known as a **clutchless manual transmission**, **automated manual transmission, flappy-paddle gearbox**, or **paddle-shift gearbox**) is an automobile transmission that does not change gears automatically, but rather facilitates manual gear changes by dispensing with the need to press a clutch pedal at the same time as changing gears. It uses electronic sensors, pneumatics, processors and actuators to execute gear shifts on the command of the driver or by a computer. This removes the need for a clutch pedal which the driver otherwise needs to depress before making a gear change, since the clutch itself is actuated by electronic equipment which can synchronise the timing and torque required to make quick, smooth gear shifts.

- A semi-automatic transmission is a very advanced system, which still uses a clutch to perform the gear shift instead of a torque converter. Unlike the manual transmission, the computer does all of the clutch disengaging, gear shifting, and clutch engaging. This not only makes the gear shifting faster than manual transmission, but also prevents the vehicle from stalling when the car is stationary.

- **The two most common semi-automatic transmissions are direct shift transmission (aka dual-clutch transmission) and electrohydraulic manual transmission (aka sequential transmission)**

Dual clutch transmission (DCT)

Also called Direct Shift Gear Box, it consists of two, linked layshaft transmissions with two power paths: one for even and the other for odd number gears (Fig. 5.28). There is a layshaft as in an ordinary manual gear box, but in this case, the layshaft actually consists of two concentric shafts, one inside the other. There are two output shafts that mesh to a third shaft which goes to the differential. At the input end each layshaft has a clutch to allow shifting. Both these layshafts are again linked to the output shaft. In this the shift quality is better. It can shift gear in 8 milliseconds, which is 50 times quicker than the blinking of an eye which takes 400 milliseconds. Moreover one clutch engages gear as the other one disengages, thus minimizing the time the gear box is not driven under power, which means least fluctuations in the torque output. However, both in DSCT and DCT, since the shifting is achieved through synchronisation of only the non-engaged partial transmission, it becomes impossible to skip two gears. Due to the best shifting characteristics out of the above types, the double clutch type (DSCT or DCT) is finding maximum use in modern transmissions. Advantages of the Double Clutch type of transmissions are :

1. Improved acceleration, fuel economy and emissions compared to conventional automatic transmissions.
2. Gentle, jerk-free gear changes as in an automatic transmission, combined with the efficiency of a manual transmission.
3. Less complicated and lighter since automatic's torque converter, fluid pump and multiple clutches are eliminated, reducing the weight by 30% approximately.
4. Less costly.

The main disadvantage of a double clutch manual transmission is its limited ability to skip gears, which is an essential characteristics of an automatic transmission.

A dry clutch DCT has 1% additional fuel economy benefit compared to a wet clutch DCT due to the elimination of the oil pump and its accompanying losses.

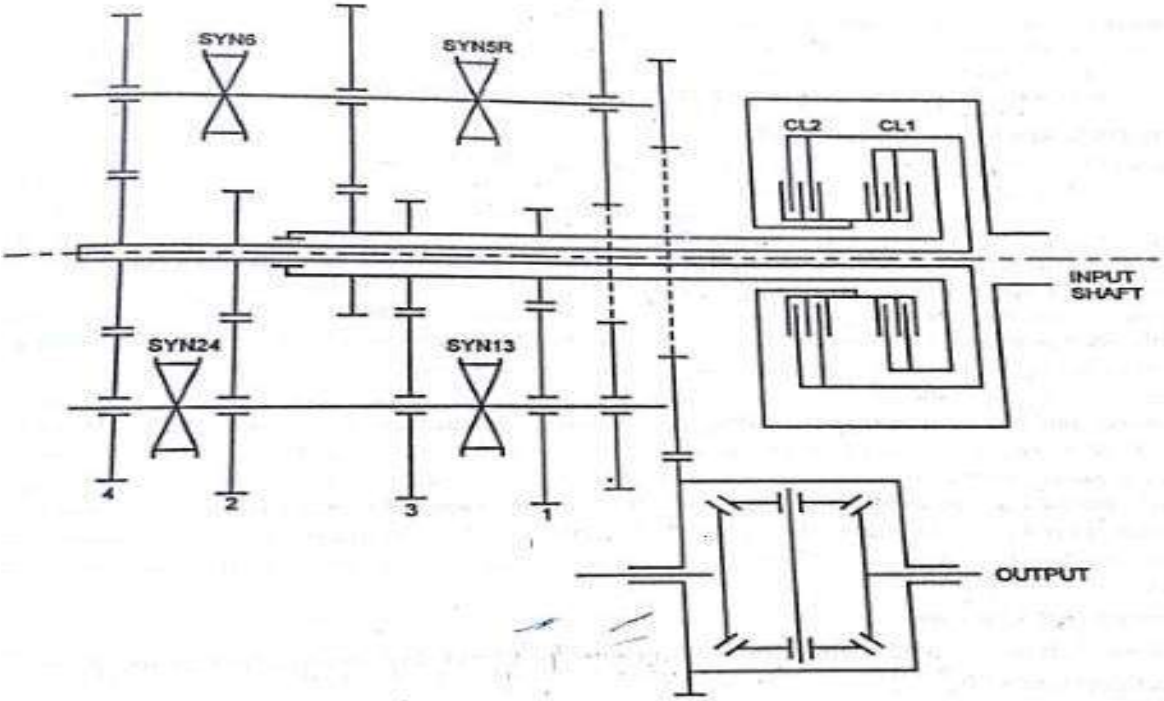

Fig. Dual clutch Transmission.

Automatic transmission

AUTOMATIC TRANSMISSION

An automatic transmission is an automobile gear box that can change gear ratios automatically as the automobile moves under varying conditions, thus freeing the driver from having to shift gears manually.

Principle

The main components of an automatic transmission are the converter housing case, oil pan and the extension housing. The converter housing encloses the torque converter and may be integral with the case or separately bolted to the case. The case contains the epicyclic gear train while the extension housing encloses the output shaft.

The entire transmission unit is attached to the engine block by means of bolts through holes in the converter housing flange.

The case is usually made of aluminium while the oil pan is ordinarily made of stamped steel, aluminium. The oil pan contains the transmission fluid.

Fig. 5.. shows the layout of a Borg-Warner automatic transmission. It is observed that it is simply combination of the torque converter and epicyclic gear trains described earlier.

The turbine of the torque converter drives the ring gear of the first gear train through a free wheel 1

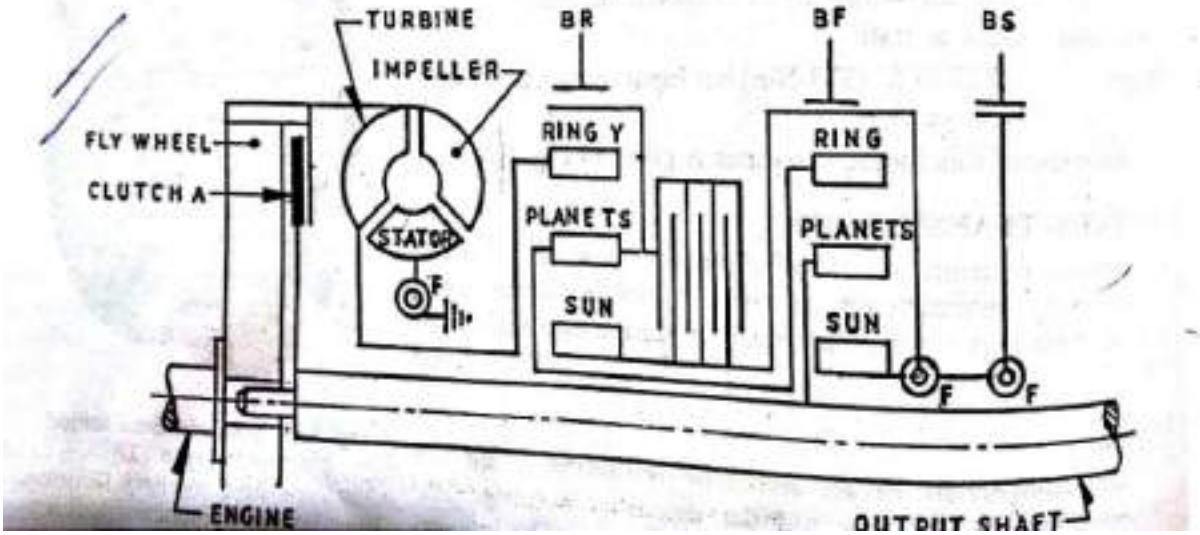

drive to the ring gear of the second gear train is then taken from the planet carrier of the first train so that the two act in series.

This arrangement gives three forward and one reverse speeds. For direct gear, clutch *A* is engaged. The second gear is obtained by engaging clutch *B* and applying brake *BS*. The application of both brakes *BS* and *BF* gives the first *i.e.*, the lower most gear. For reverse gear only brake *BR* is applied.

The selector lever for fully automatic transmission generally has five positions , PRNDL. Position 2 and 1 are substituted for L making it as PRND 21. Where:

P-Park. In this position, there is no drive through the transmission. A mechanical lock actuated by a linkage causes a parking pawl to engage in the slots around a ring gear attached to the output shaft (Fig. 15.30). Thus the parking pawl locks the output shaft to the transmission casing due to which backward or forward movement of the vehicle is arrested. The engine may be started in this position.

N-Neutral. When this position is selected, all clutches and band brake are disengaged, as a result there is no drive through the transmission. The engine may be started in this position.

D-Drive. This position is used for all normal driving conditions, automatically producing 1-2, 2-3 up-shifts and 3-2, 2-1 downshifts at suitable road speeds or according to the position of the accelerator pedal. The engine does not start in D-drive range.

2-First and Second. This position is chosen to restrict gear changes automatically from 1-2 up-shifts and 2-1 downshifts only. The selector must not be positioned in 2 ranges above 100 km/h. The engine does not start in this range position.

1-First. When this position is selected, the transmission is not permitted to shift into second and third gear. A friction clutch locks out the one-way roller clutch so that better control may be obtained when travelling over rough or wet ground or icy roads. Engine braking on overrun is available when descending steep hills.

First Gear (D-1st).

The selection of the particular gear and application of corresponding clutch and brake is done hydraulically. The hydraulic pressure is regulated by two factors (*i*) car speed that controls oil pressure on one side of the shift valve and (*ii*) the throttle opening controlled by the driver through accelerator pedal, which controls oil pressure on other side of the shift valve. This is made clear by means of a simplified diagram, *viz.*, Fig. 5.17. The working of the shift valve to operate a two-speed transmission is shown in this figure. At low speeds, the governor pressure is less due to less centrifugal force. The throttle pressure is thus more than the governor pressure, which causes the shift valve to move left [Fig. 5.17 (*a*)]. This connects the oil under pressure to go the brake drum for applying low gear.

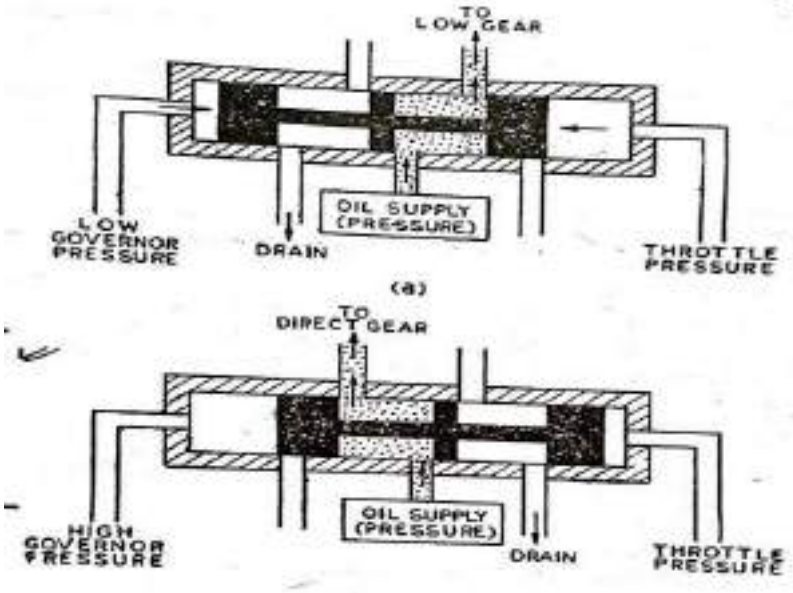

Comparison of automatic transmission with manual transmission

Merits

1. More precise control of shifting results in better drivealility.
2. No skill required for operating.

Demerits

1. Higher fuel consumption due to lower mechanical efficiency.
2. Higher initial cost.
3. More complex construction which results in expensive repairs.

Hydramatic Drive

Hydramatic drive, used in Oldsmobile's 1940 models was the first mass-produced fully automatic transmission. It had only a fluid flywheel and not a torque converter. There were three epicyclic gear sets providing four forward speeds and reverse.

First automatic transmission with a torque converter was Buick's *Dynaflow* and was introduced in 1948, followed by Packard's *Ultramatic* in 1949 and Chevrolet's *Powerglide* in 1950. All these transmissions had only two forward speeds, depending upon the torque converter for additional gear reduction.

Borg-Warner developed three-speed torque converter automatics in 19
Later other manufacturers also developed such three-speed automatics, which were replaced
overdrive-equipped automatics in 1980s, providing four or more forward speeds. This period also sa
use of lock-up torque converter to improve fuel economy.

During late 1980s and early 1990s, all the control logic of the automatics was transferred from
body to the engine computer or a separate transmission computer sharing information with e
computer. In such automatics, solenoids are operated by the computer control shift patterns and gear
allowing for more accurate control of shift points, shift quality, faster shift times and even semi-autom
control, where the driver tells the computer when to shift. In modern automatics, computers can
identify the driver's style and adapt the same.

First five-speed automatics came from ZF Friedrichshafen and BMW in 1992, whereas first six-s
automatics from the same manufacturers were introduced in 2002. A year later, Mercedes- Benz came
with 7-speed 7G-Tronic. The latest is Toyota's 8-speed automatic employed on Lexus LS 460 and 60

[illegible]. Driving and Holding Devices

An automatic transmission is fitted with a number of brake bands and multi-plate clutches. Clutches are used to connect the gear train to the input shaft and band brakes hold a part of the train stationery. In newer designs of gearboxes, band brakes are replaced by clutches to obtain a compact and lighter gearbox. Additionally, it eliminates the need for periodic adjustment of the brake bands to compensate for friction lining wear.

A pump driven at engine speed from the fluid converter provides pressurized oil, which is distributed by control valves to the appropriate clutch and brake for actuation of these parts.

Multi-plate Clutches.

Numerous wet type multi-disc clutches are used with automatic transmission and most of these operate on the same principle. Figure 15.31 represents a typical construction of a multi-plate clutch. Two sets of steel plates, inner and outer, are connected alternately by protruding tabs to the hub and drum respectively. The faces of the inner plates are bonded with a friction material having either a hard or comparatively soft texture. A hard facing is made of a cellulose compound, or synthetic fibre, bonded together with a phenol resin to obtain a suitable friction value. A soft facing, which is based on a compound of paper, is more porous and elastic. Paper-based facings normally provide a smoother and quieter operation over a wider range of temperature and pressure.

When the clutch is to be engaged, pressurized oil is supplied through a drilling, in either the casing or the shaft, to the clutch operating cylinder. A number of synthetic rubber "O" rings and square-section, cast iron seals are used to prevent leakage of oil between moving parts and loss of pressure needed to operate the clutch. Torque transmitted by a given multi-plate clutch

the pressure through a check valve. When oil pressure operates the clutch the check valve is held closed. Removal of this pressure allows the ball to move outwards due to the centrifugal effect so that the release hole in the check valve opens.

Some automatic systems use a clutch operated by two pistons, one small and the other large in area. This construction (Fig. 15.32) allows the thrust on the plates to be varied to suit the conditions so that a smoother operation is obtained.

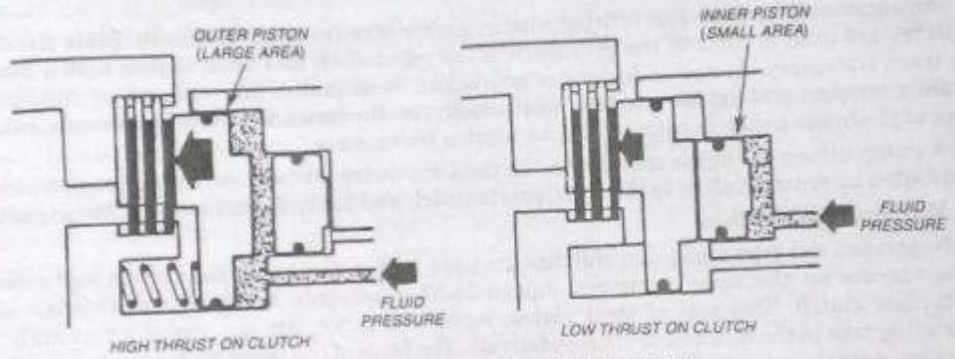

Fig. 15.32. Clutch operation with two pistons.

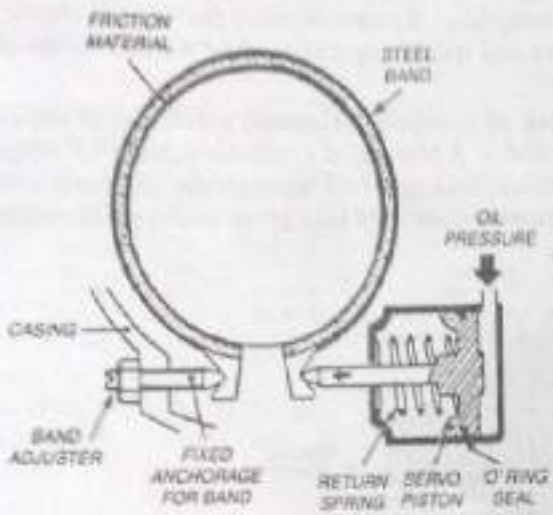

Fig. 15.33. Brake band actuation by single-acting servo.

Brake Bands.

Normally two or more brake bands are used in a gearbox to prevent rotation of the gear members. An external contracting, single-band type brake is installed (Fig. 15.33). The band is anchored at one end to the casing to resist the rotational force and is actuated by a hydraulic servo at the free end. For maximum braking torque the anchor should be at a position such that the rotational force of the drum produces a self-wrapping action. The brake band is made of spring steel and is internally lined by bonding to it hard friction material. When the brake is applied this material makes contact with a steel drum, which is a part of the gear train.

An adjuster is normally provided at the band anchor to compensate for wear. The screw for this adjuster is often carried through the gearbox casing to simplify maintenance. For adjustment of the band, the lock nut is released and then the screw is tightened to a given clearance or torque setting. The common types of servo actuator used to suit the gearbox, are:

- Single-acting
- Delay
- Double-acting.

Continuous variable transmission (CVT)

Unlike traditional automatic transmissions, continuously variable transmissions don't have a gearbox with a set number of gears, which means they don't have interlocking toothed wheels. The most common type of CVT operates on an ingenious **pulley system** that allows an infinite variability between highest and lowest gears with no discrete steps or shifts.

Different types of CVTs:

(1) pulley-based, (2) toroidal and (3) hydrostatic.

1. pulley-based CVT

Most CVTs only have three basic components:

- A high-power metal or rubber belt
- A variable-input "driving" pulley
- An output "driven" pulley

CVTs also have various microprocessors and sensors, but the three components described above are the key elements that enable the technology to work.

The variable-diameter pulleys are the heart of a CVT. Each pulley is made of two 20-degree cones facing each other. A belt rides in the groove between the two cones. **V-belts** are preferred if the belt is made of rubber. V-belts get their name from the fact that the belts bear a V-shaped cross section, which increases the frictional grip of the belt.

When the two cones of the pulley are far apart (when the diameter increases), the belt rides lower in the groove, and the radius of the belt loop going around the pulley gets smaller. When the cones are close together (when the diameter decreases), the belt rides higher in the groove, and the radius of the belt loop going around the pulley gets larger. CVTs may use hydraulic pressure, centrifugal force or spring tension to create the force necessary to adjust the pulley halves.

Variable-diameter pulleys must always come in pairs. One of the pulleys, known as the **drive pulley** (or **driving pulley**), is connected to the crankshaft of the engine. The driving pulley is also called the **input pulley** because it's where the energy from the engine enters the transmission. The second pulley is called the **driven pulley** because the first pulley is turning it. As an **output pulley**, the driven pulley transfers energy to the driveshaft.

When one pulley increases its radius, the other decreases its radius to keep the belt tight. As the two pulleys change their radii relative to one another, they create an infinite number of gear ratios -- from low to high and everything in between. For example, when the pitch radius is small on the driving pulley and large on the driven pulley, then the rotational speed of the driven pulley decreases, resulting in a lower “gear.” When the pitch radius is large on the driving pulley and small on the driven pulley, then the rotational speed of the driven pulley increases, resulting in a higher “gear.” Thus, in theory, a CVT has an infinite number of "gears" that it can run through at any time, at any engine or vehicle speed.

The simplicity and stepless nature of CVTs make them an ideal transmission for a variety of machines and devices, not just cars. CVTs have been used for years in power tools and drill presses. They've also been used in a variety of vehicles, including tractors, snowmobiles and motor scooters. In all of these applications, the transmissions have relied on high-density rubber belts, which can slip and stretch, thereby reducing their efficiency.

The introduction of new materials makes CVTs even more reliable and efficient. One of the most important advances has been the design and development of metal belts to connect the pulleys. These flexible belts are composed of several (typically nine or 12) thin bands of steel that hold together high-strength, bow-tie-shaped pieces of metal.

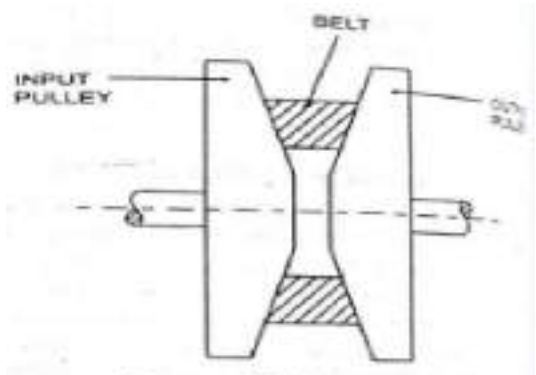

Variator pulleys.

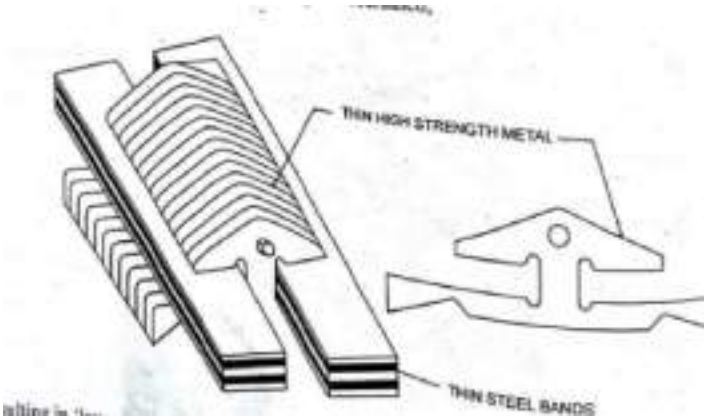

2. Toroidal CVT

Another version of the CVT -- the toroidal CVT system -- replaces the belts and pulleys with **discs** and **power rollers**

Although such a system seems drastically different, all of the components are analogous to a belt-and-pulley system and lead to the same results -- a continuously variable transmission. Here's how it works:

- One disc connects to the engine. This is equivalent to the driving pulley.
- Another disc connects to the drive shaft. This is equivalent to the driven pulley.
- Rollers, or wheels, located between the discs act like the belt, transmitting power from one disc to the other.

The wheels can rotate along two axes. They spin around the horizontal axis and tilt in or out around the vertical axis, which allows the wheels to touch the discs in different areas. When the wheels are in contact with the driving disc near the center, they must contact the driven disc near the rim, resulting in a reduction in speed and an increase in torque (i.e., low gear). When the wheels touch the driving disc near the rim, they must contact the driven disc near the center, resulting in an increase in speed and a decrease in torque (i.e., overdrive gear). A simple tilt of the wheels, then, incrementally changes the gear ratio, providing for smooth, nearly instantaneous ratio changes.

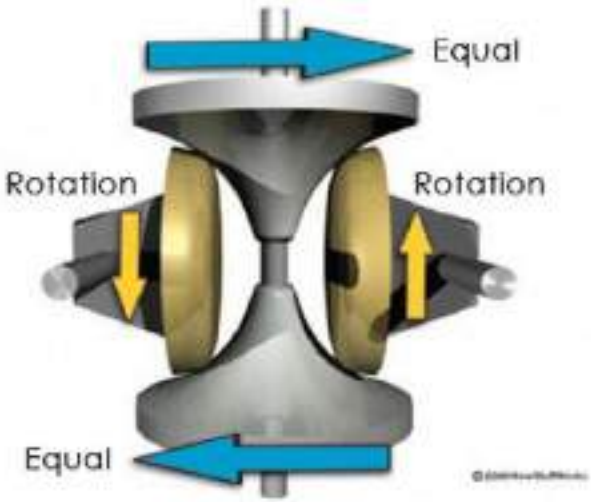

3. Hydrostatic CVT

Both the pulley-and-V-belt CVT and the toroidal CVT are examples of frictional CVTs, which work by varying the radius of the contact point between two rotating objects. There is another type of CVT, known as a hydrostatic CVT, that uses **variable-displacement pumps** to vary the fluid flow into hydrostatic motors. In this type of transmission, the rotational motion of the engine operates a hydrostatic pump on the driving side. The pump converts rotational motion into fluid flow. Then, with a hydrostatic motor located on the driven side, the fluid flow is converted back into rotational motion.

Often, a hydrostatic transmission is combined with a **planetary gearset** and **clutches** to create a hybrid system known as a **hydromechanical transmission**. Hydromechanical transmissions transfer power from the engine to the wheels in three different modes. At a low speed, power is transmitted hydraulically, and at a high speed, power is transmitted mechanically. Between these extremes, the transmission uses both hydraulic and mechanical means to transfer power. Hydromechanical transmissions are ideal for heavy-duty applications, which is why they are common in agricultural tractors and all-terrain vehicles.

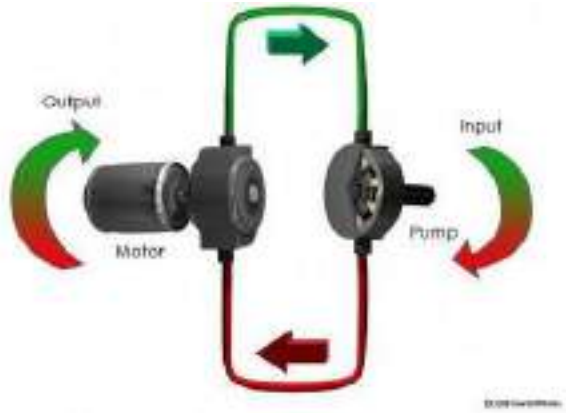

CVT BENEFITS

Continuously variable transmissions are becoming more popular for good reason. They boast several advantages that make them appealing both to drivers and to environmentalists.

1. Constant stepless acceleration from start to high speed, eliminating 'shift shock' to give smoother ride. In fact the operation is much smoother than even conventional hydraulic auto transmission.
2. It keeps the car in optimum power range under all conditions, thus decreasing fuel consumption. Besides, it gives better fuel economy than hydraulic transmission by avoiding torque converter slippage.
3. Responds better to changing conditions, *e.g.*, throttle and speed changes, which eliminates gear hunting while moving up an incline.
4. Less emissions due to better engine control under all conditions.

Disadvantages

1. Torque handling capability of a CVT is limited by the strength of the belt or chain inside it, limiting its use in small cars. Audi's Multitronic is limited to 300 Nm of torque. Perhaps the biggest vehicle with a CVT is the Nissan Murano, which is a four- wheel drive vehicle with a V-6 engine. At the present technology level, CVTs can handle maximum torque of 350 Nm only.
2. CVTs have not been used successfully for series production standard drivelines due to packaging. A CVT needs a relatively large centre distance which cannot be provided in an inline configuration, e.g., with longitudinal engines in rear wheel drive vehicles. However, CVTs have been successfully employed in small and medium size vehicles with front transverse drivelines.
3. The life of a CVT automatic in light duty use has been found to be about the same as that of a conventional automatic transmission. However, when the vehicle is subjected to heavy stop-and-go driving, as in case of delivery vehicles, CVT is found to have much shorter life, say, about 1,50,000 km.

Automobile Engineering
5
Drive Lines & Final Drive & Rear Axle

By: Pulkit Agrawal
Assistant professor
Mechanical Engg. Dept

Propeller shaft

- Function of propeller shaft:- This is a shaft which transmits the drive from the transmission system (gear box) to the rear axle through differential.

1. Transmit the power from gear box top final dive.
2. To compensate the change in length.
3. Transmit motion at an angle which is varying frequently.

- The rotary motion of the transmission main shaft is carried out through the propeller shaft to the differential, thus causing the rear wheels to rotate.
- Propeller shaft is used in front engine rare wheel drive vehicle to connect gear box & differential.
- Propeller shaft is manufactured in thin walled steel tube.

Propeller shaft

- The propeller shaft has following three components:

1. Shaft: it has to withstand mainly torsional loads. Therefore, it is usually made of tubular cross-section. At high speeds, whirling should be avoided. For this reason, this shaft has to be well balanced. Shafts are made of steel, aluminum or composite material
2. Universal joint: one or more universal joints are used to permit angle change.
3. Slip joint: depending upon the type of the drive, one slip joint may be employed in the shaft. This helps to adjust the length of the propeller shaft, according to the rear axel movements.

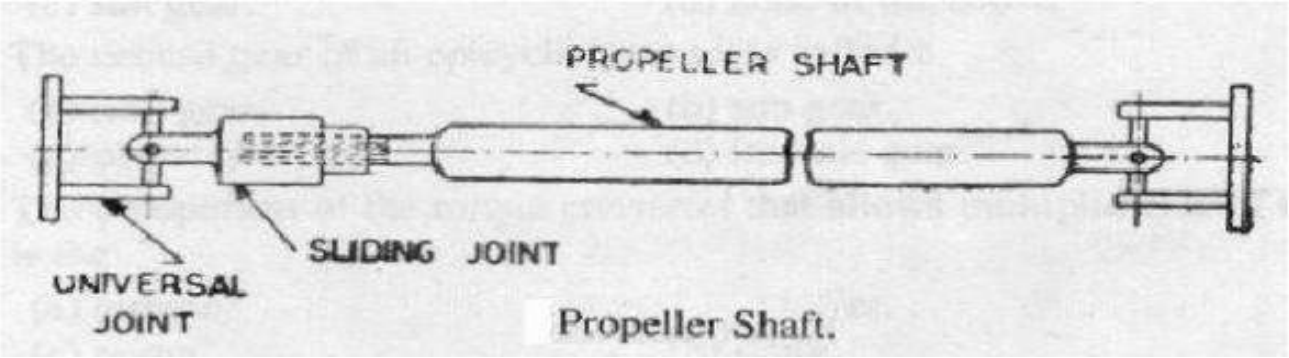

Propeller Shaft.

Universal joint

- The purpose of universal joints is to transmit power (torque) even at varied angles of the transmission system (propeller shaft).
- Power is transmitted from the gear box to the differential via the propeller shaft. Gear box is connected to one end of the propeller shaft by means of the universal joint. The differential is connected to the other end of the propeller shaft by means of another universal joint.
- The most common type of universal joint is Hook's Joint.

Cross type or spider & two yoke (Hook's Joint)

- A single universal joint is shown in fig, there is a driving yoke on one side which is connected to the main shaft of the gear box & the driven yoke is connected to the propeller shaft. These two yokes are connected by means of a crossed spider. When the driving shaft rotates, the driven shaft also rotates. At the same time the universal joint permits angular motion. This propeller haft can rotate at any angle. Thus power is transmitted from the gear box to the propeller shaft at any particular angle.
- Universal joints have one common defect i.e. the speed of the driven shaft does not remain constant. Depending upon the angle of inclination of the shafts, driven shaft speed undergoes cyclic variation as shown in fig.

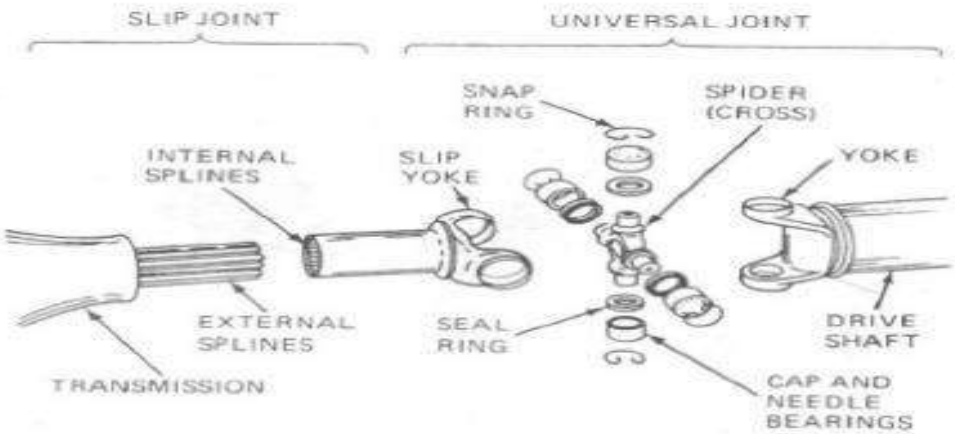

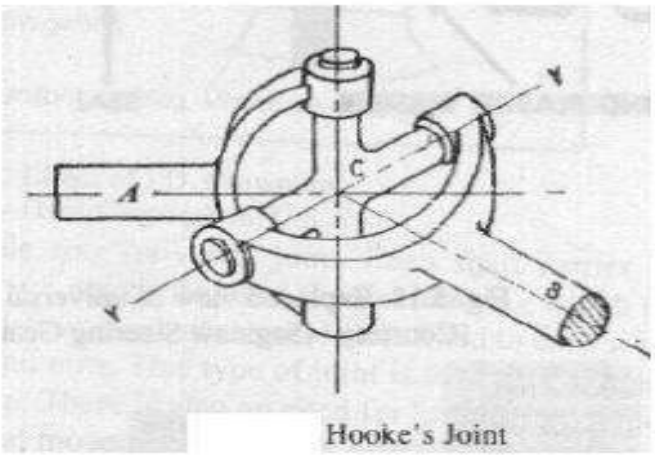

Hooke's Joint

Constant velocity universal joint

- This type of joints permit movement of both driving & driven shaft at constant velocity.
- One method to achieve a uniform driven shaft speed is by using two such joints as shown in fig.
- The intermediate shaft is so arrange that it makes equal angles with first and third shifts.
- The variation caused by one joint is then cancelled out by the second joint.
- however, this will be valid only when the angles on both joints are exactly equal, which is not always the case in practice.

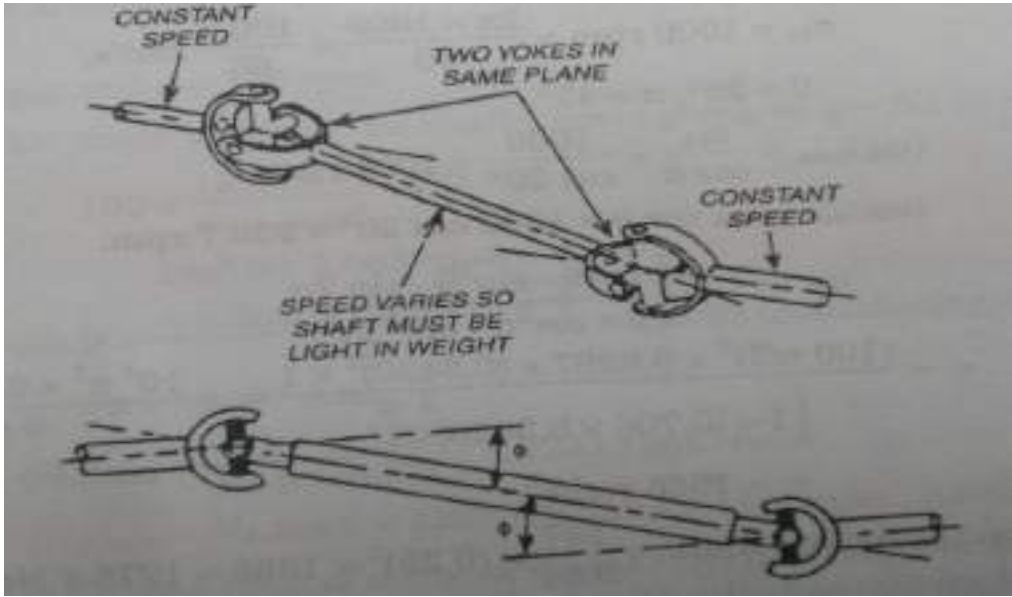

Constant velocity joint

1. Constant velocity joints are used where the front axle are being driven, regulation of rotation and transmission of torque at large indication are vital.
2. In these vehicles the inclination between the shafts may assume a large varying (40°).
3. The speed of shaft connected by these joints is absolutely equal.

Final drive

- In most automobile vehicles the final driver is embodied in rear axle.
- But in various popular vehicles with front wheel drive and a few special purpose vehicles with four wheel drive, it becomes necessary to consider final drives as units dependent of their positions.

➢ FUNCTIONS OF FINAL DRIVE: In a motor vehicle the final drive has two purposes.

1) To provide a permanent speed reduction. For motor cars the reduction is usually about 4:1 and 10:1 in heavy vehicle.
2) To turn the drive through 90° so that the torque may be transmitted from propeller shaft to the rear axle.

Construction of final drive

1) The final drive consist of a bevel pinion and crown wheel (ring gear)as shown in the figure.
2) The bevel pinion is mounted on the shaft
3) From the crown wheel the drive goes to the rear axle through the diffrential.
4) There are three types of the final drive gearing:

a. Straight Bevel gears
b. Sprial Bevel Gears
c. Hypoid Gears

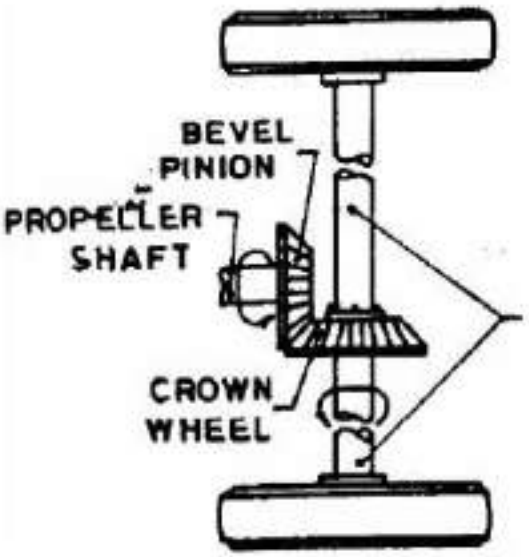

- Straight Bevel gears: this is the arrangement made in the older models. In this, the teeth of the crown wheel are straight. A bevel pinion of the propeller shaft is in mesh with the bevel gear of the crown wheel.

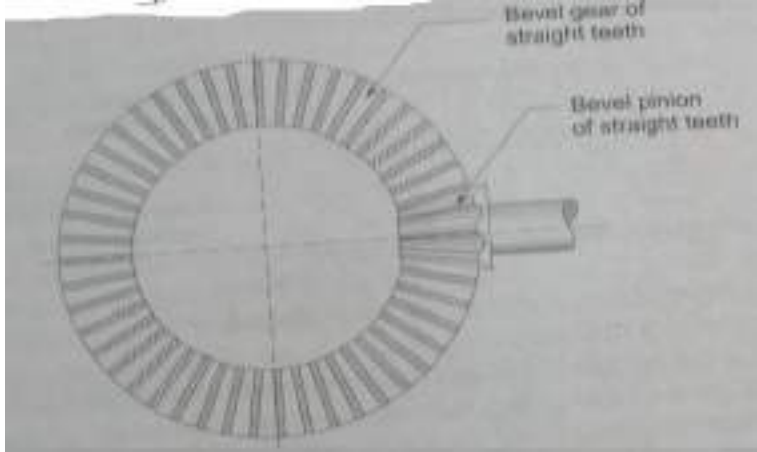

- Spiral bevel gear: in this the teeth of the crown wheel are in the form of a spiral gear. The pinion of the propeller shaft also has teeth in the same form. No sound is developed when these teeth mesh & the meshing is also very smooth. These are the advantages of this unit.

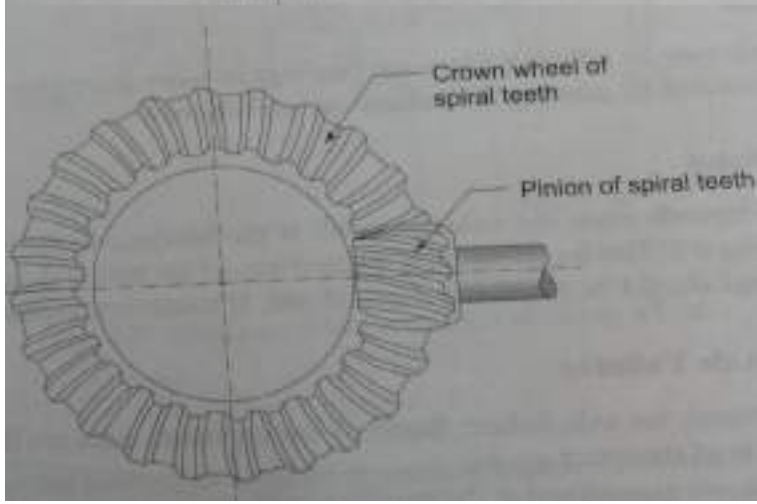

- Hypoid spiral gear: this is a form of bevel pinion & crown wheel drive. The axis of the pinion shaft is below the centre of the crown wheel. In this arrangement too the running is noiseless.

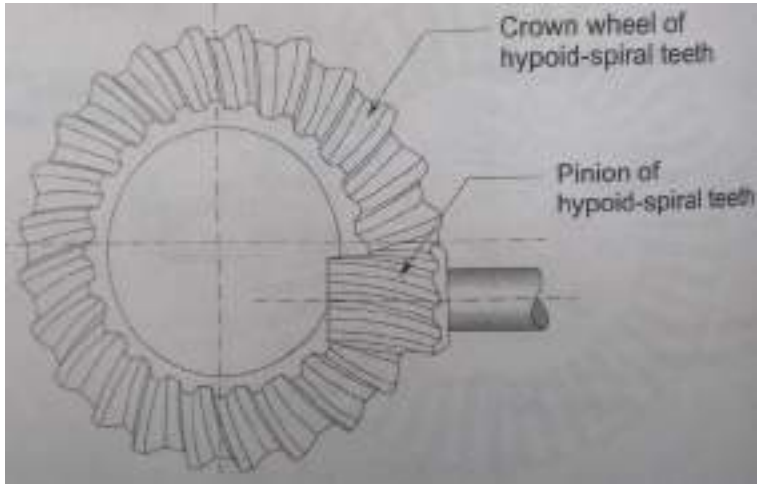

Construction of final drive

1) Final drive is the last stage in transferring power from engine to wheels.
2) It reduces the speed of the propeller shaft (drive shaft) to that of wheels.
3) It also turns the drive of the propeller shaft by an angle of 90° to drive the wheels.
4) The propeller shaft has a small bevel pinion which meshes with crown wheel. The crown wheel gives rotary motion to rear axles.
5) The size of crown wheel in bigger than that of bevel pinion, therefore, the speed of rear axles (or crown wheel) in lower than the speed of pinion.
6) Final drive is of two types, i.e. chain type and gear type.
7) For final reduction in speed two types of gears can be used.
8) One of them may be use of bevel gears and another may be worm and worm wheel.
9) Worm and worm wheel combination provides large reduction without employing larger gears. It is strong also.

Differential

1) When a vehicle travels in a straight-line, the two rear wheels turn on road exactly at same speed & there is no relative movement between the rear wheels.
2) But when vehicle takes a turn, the outer wheel turns on a longer radius than inner wheel. The outer wheel turns faster than inner wheel i.e. there is relative movement between two rear wheels.
3) If the two rear wheels are rigidly fixed to a solid rear axle, the inner wheel will slip, which will cause rapid tire wear, steering difficulties & poor road holding.
4) Therefore there must Le some mechanism in the rear axle which should reduce the speed of inner wheels & increase the speed of outer wheels while taking turns.
5) It should be at the same time keep the speeds of all the wheels same when going straight ahead. Such a device which serves the above function is called as differential.

Differential

- To understand the principle on which differential works consider figure:

1. To the crown wheel of the final drive is attached a cage, which carries a cross-pin where two planet pinions are employed.
2. Two sun gears mesh with the two planet pinions. Axle half shafts are splined to each of these sun gears.
3. When the vehicle is going straight, the cage & inner gears rotate as a single unit & two half shafts revolve at same speed. In this situation, there is no relative movement among the various differential gears.
4. To understand what happens when the vehicle is taking turn, assume that the cage is stationary. Then turning any one sun gear will cause other to rotate in the opposite direction.
5. This means that if the left sun gear rotates "n" times in a particular time. the right gear will also rotate "n" in the same period. but of course in opposite direction.

Differential

6. Thus for example, consider a vehicle with wheel speed "N" r.p.m. going straight. When it takes turn towards, there will be resistance to the motion of right wheel & as a result differential action: if the right wheel rotates back at "n" rpm, then left wheel will rotate forwards at "n' rpm. This will give resultant speed of left wheel as (N+n) and that of right wheel as (N-n) rpm.

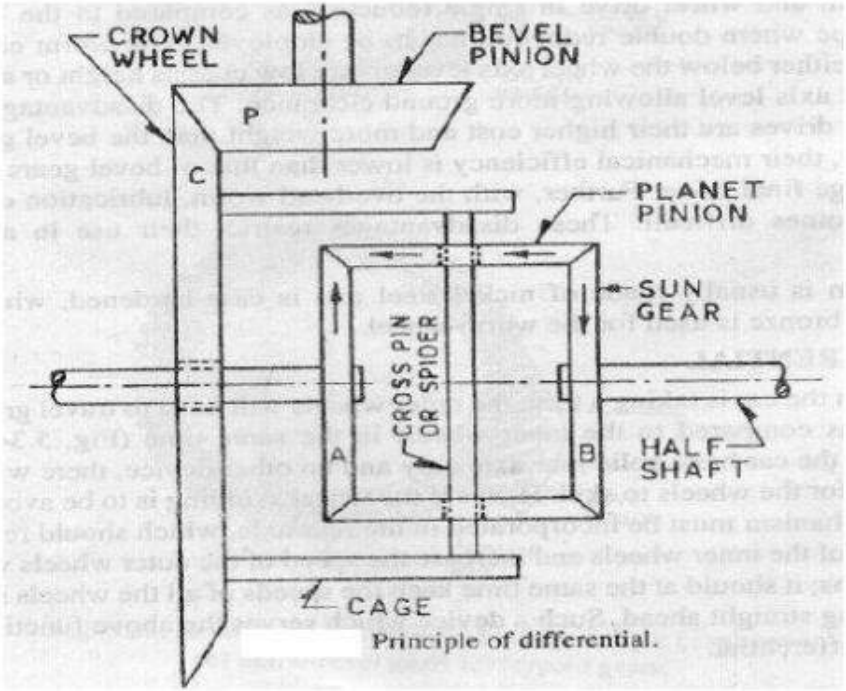

Principle of differential.

Non slip differential

- Conventional type differential described delivers same torque to each rear wheel. If any of the wheels slips due to any reason the wheel does not rotate and vehicle does not move.

- Non-slip or limited slip differential or self locking type differential overcomes this drawback:

1) A self locking differential consists of two clutches, one on each side, to lock the side gears and axles to the differential cage, when the differential action is not desired.
2) The mechanism consists of four differential pinion gears mounted on two cross shafts at right angles to each other.
3) When the differential cage is driven by the rear axle gears, the turning resistance causes the cross shafts to move up the ramps and push the shafts apart.
4) This action forces the pinions on each shaft to bear against the side gear rings in order to apply the clutch which locks both axle shafts and force them to turn at the same speed.

Differential Lock

1) The torque transmitted by the bevel gear differential to each of the rear wheels remains equal even when they are rotating at different speeds.
2) Due to this reason if one wheel in on a slippery surface, mend, lose dirt or sand the wheel on the solid ground will not be driven while the other spins around idly.
3) When the differential lock is applied, the differential action is stopped and the whole torque is then applied to the wheel which is gripping on the road.

Rear axle

1. Rear axle transmits power from differential to the wheels so that vehicle may move.
2. Rear axle is not a single piece but it is in two parts which are connected by the differential.
3. Each part of rear axle is called the half shaft.
4. Outer end of the rear axle carries the wheel while inner end is connected to sun gear of the differential.
5. In vehicles which employ rear wheel drive, rear wheels are driving wheels. However, in front wheel drive vehicles, front wheels are driving wheels.
6. Rear axles and differential are completely enclosed in a housing to protect them from dust, dirt, water and any possible damage.

Rear Axel

Function of rear axel:

1. To transmit power from differential to wheels
2. To carry weight of automobile.

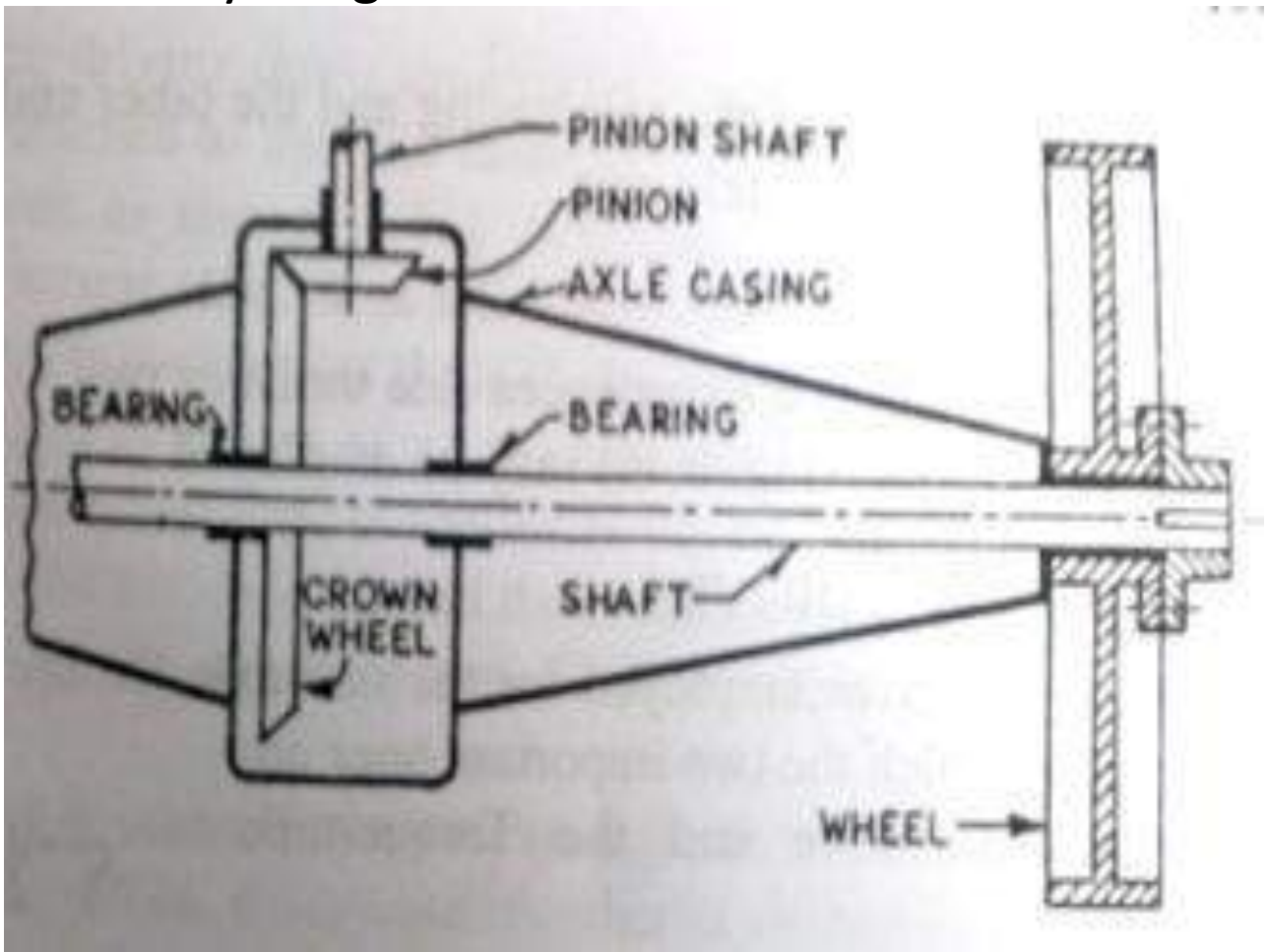

Rear wheel drive

- Commonly used rear wheel drive are:

1. Hotchkiss drive:
2. Torque tube drive:

Rear axel drive

1. Hostchkiss drive:

a) This is the simplest and most widely used type of rear axle drive.

b) In this case the springs besides taking weight of the body also take the torque reaction, driving thrust and side thrust.

c) The propeller shaft is provided with two universal joints also a sliding joint.

d) The springs is fixed rigidly in the middle to the rear axle.

e) The front end of the spring is fixed rigidly on the frame while the rear end is supported in the shackle.

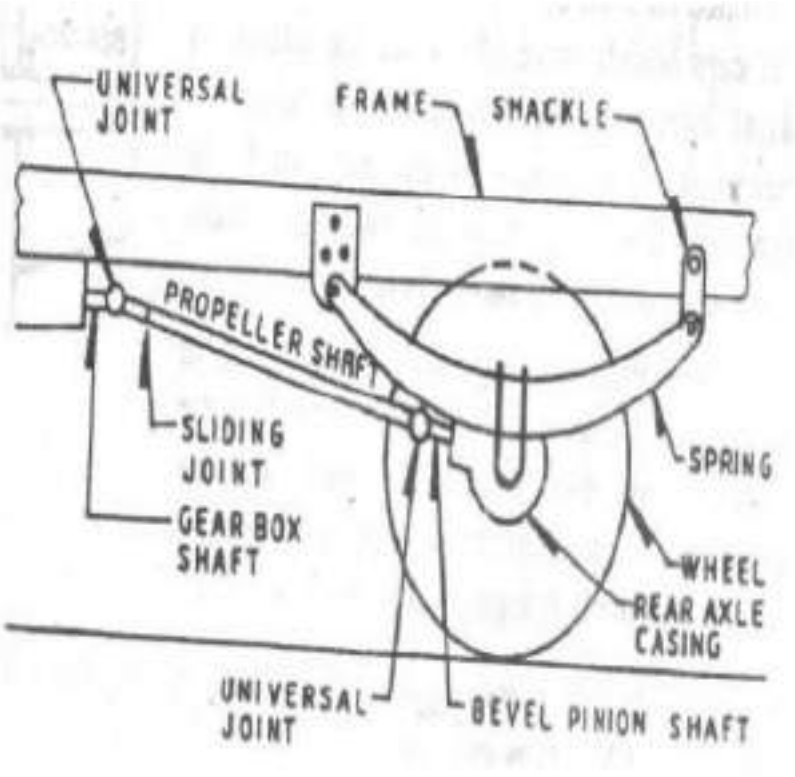

Rear axel drive

2. Torque tube drive:

a. In this type ot drive the spring takes only the side thrust besides supporting the body weight.

b. The torque reaction and driving thrust are taken by another member which is called torque tube.

c. One end of the torque tube is attached to the axle casing, another end which is in spherical shape fixed in the cup fixed to the frame.

d. The torque tube encloses the propeller shaft since the torque tube takes the torque reaction the centre line of the bevel pinion shaft will not shift.

e. So that no sliding joint is required and one universal joint is enough.

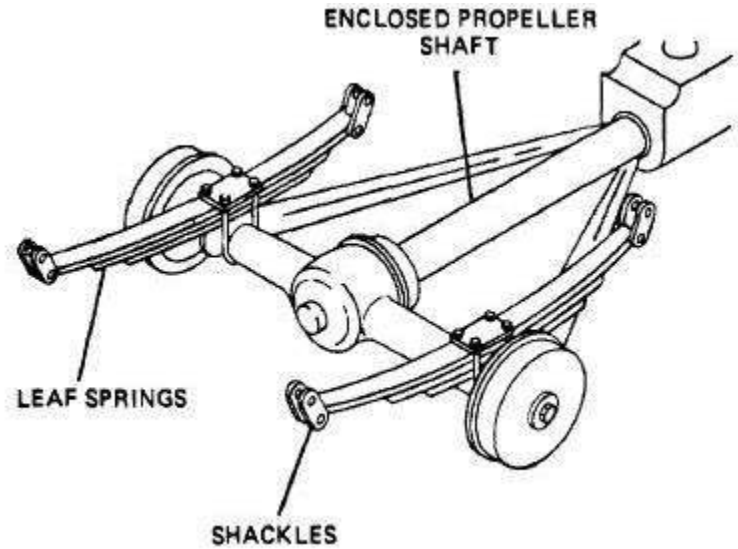

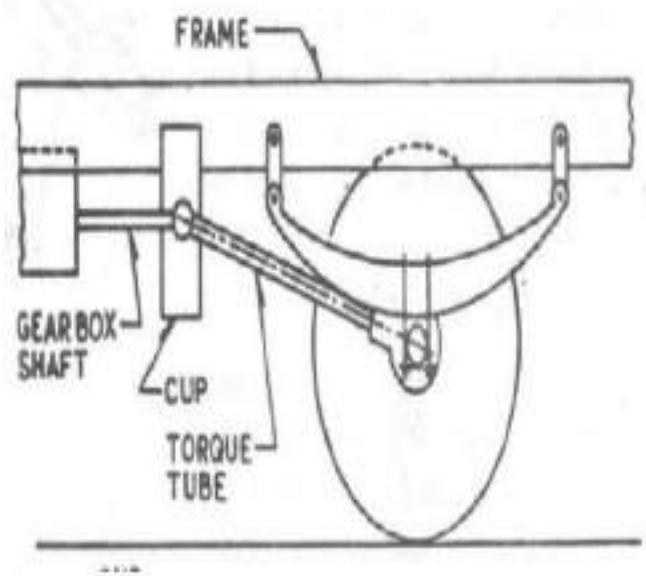

Rear axel shaft supporting

- **Load on Rear live axle half shaft**

The various loads on rear live axle half shaft are

a. Shaft force due to vehicle weight

b. Bending moment on accountant of the offset of vehicle load applied through spring seats and road wheels.

c. End thrust carried by side forces

d. Bending moment caused by end thrust and its reaction offered by tyres

e. Driving torque

Types of Rear Axle Support

Rear axles differ on the basis of method of supporting them and mounting of rear wheels.

On this basis, these axles can be classified into three types:

(a) Half floating axle /semi floating type

(b) Three-quarter floating axle

(c) Fully floating rear axle.

1. Semi floating type rear axel:

1) An axle in which the shaft has to take the entire load is called semi or non floating axle.

2) In this wheel hub is directly connected to the axle.

3) The inner end of the axle shaft is splined and is supported by the final drive unit where as outer end is supported by a single bearing inside the axle casing.

4) In this type all the loads are taken by the axle shaft.

5) The whole load acts on the shaft and shaft has a tendency to shear at the point A.

6) The semi floating axle is the simplest and cheapest but for a given torque they have to be of larger dia. for the same torque transmitted compared to the other type of rear axle supports.

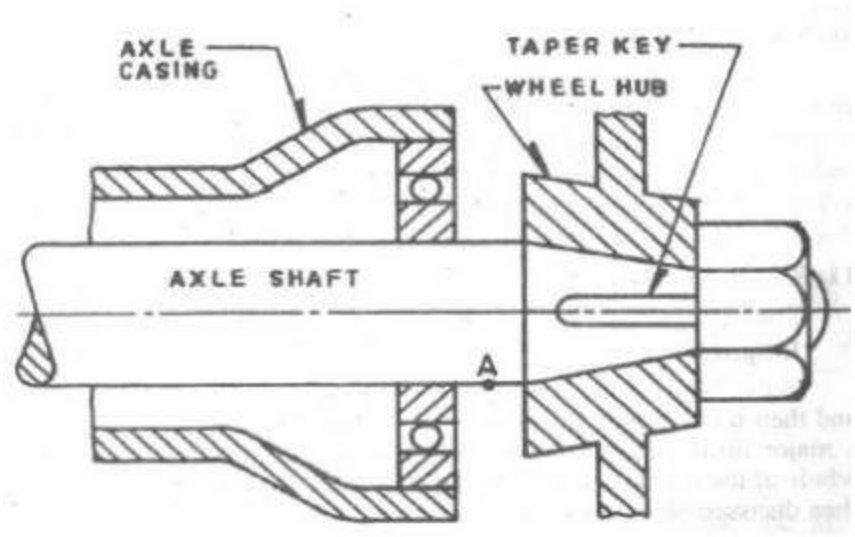

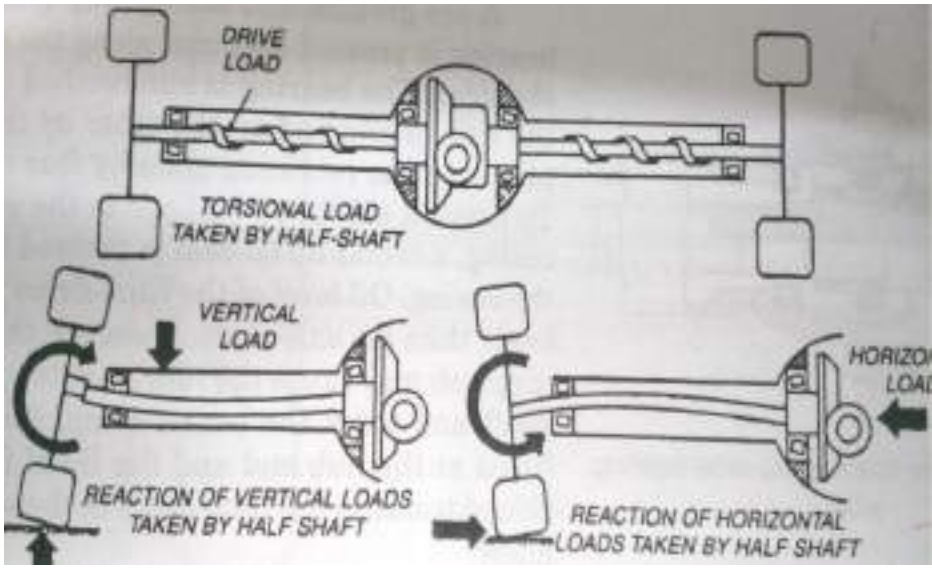

2. Three quarter floating axle:

1) This type of axle is a combination of full and semi floating bearing.

2) In this bearing is locating between the axle casing and hub axle shaft do not have to withstand any shearing or bending action due to the weight of the vehicle, which are taken up by the axle casing through the hub and bearing.

3) However it has to take the end loads and driving torque.

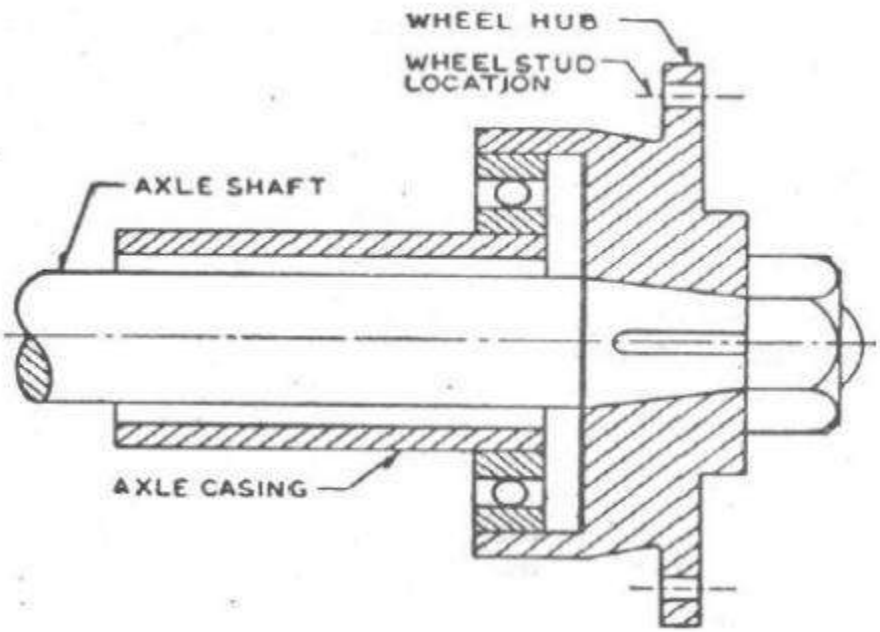

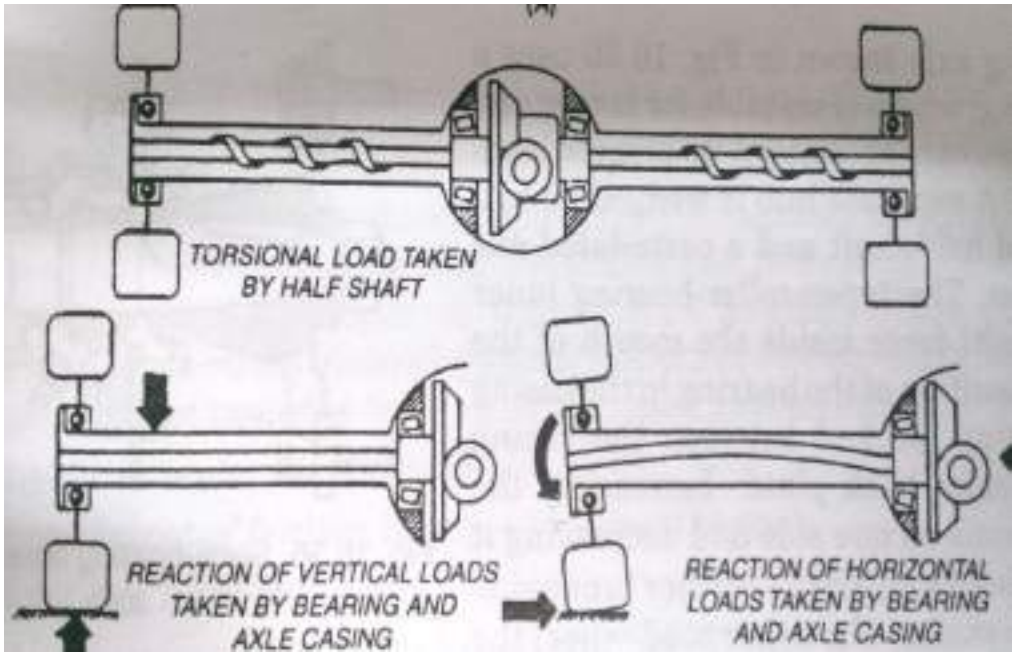

3. Fully floating rear axel:

1) This type is very robust and is used for heavy vehicle.
2) The axle shafts have flanges at the outer end which are connected to the flanged sleeve by means of bolts.
3) There are two tapper roller bearing supporting axle casing in the hub which take up any side load.
4) Thus the axle shaft carry only the driving torque. So their failure or removal does not affect the wheels.

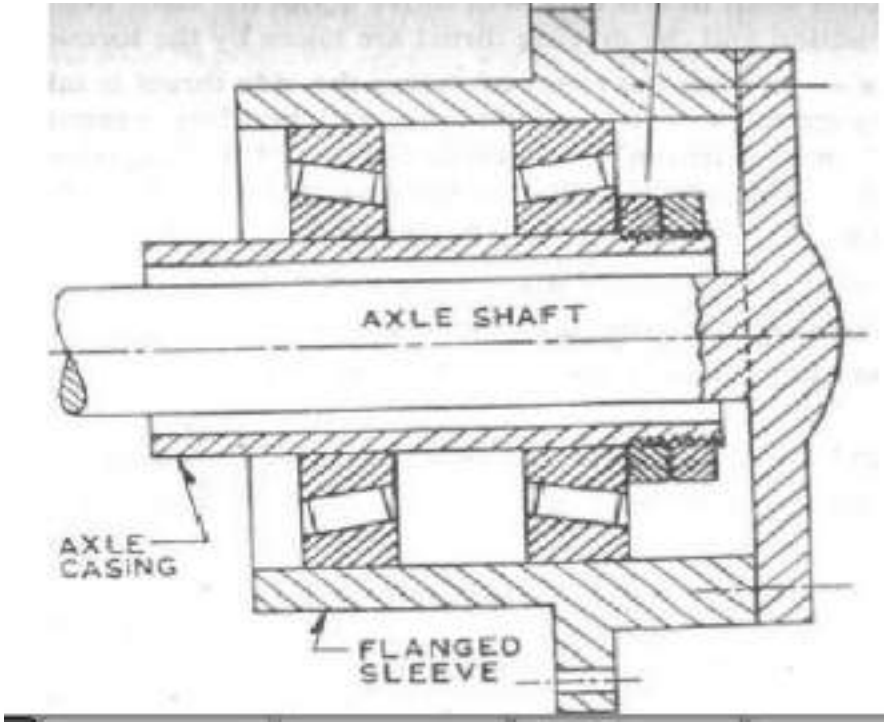

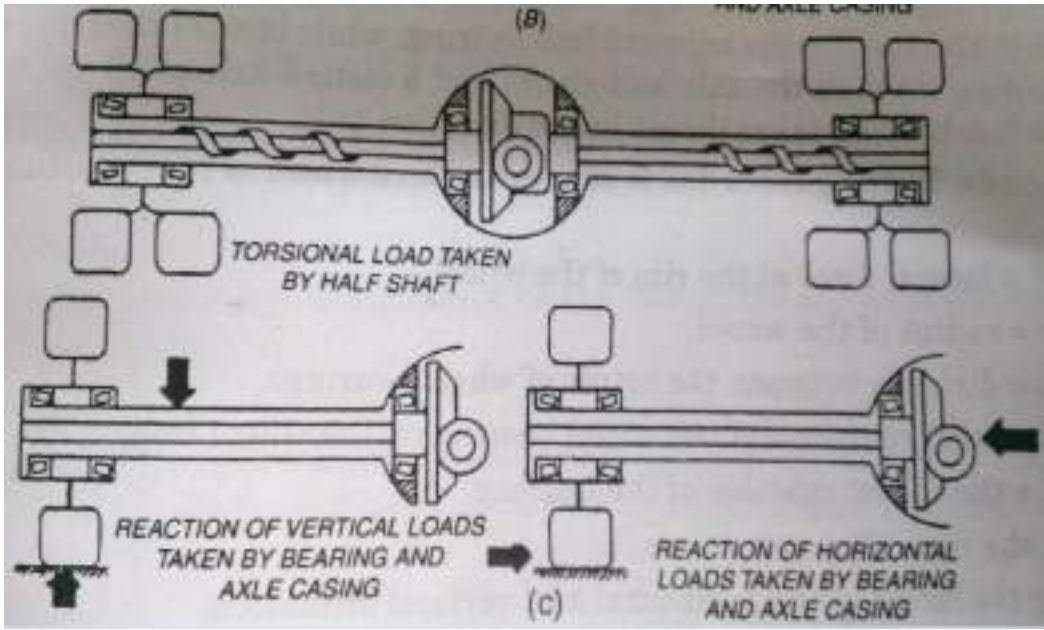

- Be safe and make safe others.
- Stay at Home and enjoy the learning.