PRODUCT DESIGN AND PRODUCTION TOOLING (PDPT)

BY

DILIP KUMAR BAGAL

ASSISTANT PROFESSOR

DEPARTMENT OF MECHANICAL ENGINEERING

Government college of engineering, Kalahandi

Email: dilipbagal90@gmail.com

SYLLABUS

Subject Code: PME6J001

Subject: PRODUCT DESIGN AND PRODUCTION TOOLING (PDPT)

MODULE – I (14 HOURS) Product Design-Product design considerations, product planning, product development, value analysis, product specification. Role of computer in product design. Process Planning – selection of processes, machines and tools. Design of sequence of operations, Time & cost estimation.

MODULE – II (14 HOURS) Forging design- allowances, die design for drop forging, design of flash and gutter, upset forging die design. Sheet metal working- Design consideration for shearing, blanking piercing, deep drawing operation, Die design for sheet metal operations, progressive and compound die, strippers, stops, strip layout.

MODULE – III (16 HOURS) Design of jigs and fixtures, principle of location and clamping, clamping methods, locating methods, Drill Jig bushing, Indexing type drilling Jig. Design of single point cutting tool, broach and form tool. Tooling design for turret lathe and automats. Design of limit gauges.

TEXT BOOKS:

1. Product Design & Manufacturing, A K Chitale, R C Gupta, Eastern Economy Edition, PHI.
2. Product Design & Development, Karl T Ulrich, Steven D Eppinger, Anita Goyal, Mc Graw Hill.
3. A Textbook of Production Engineering, P.C. Sharma, S. Chand & Co

REFERENCE BOOKS:

1. Fundamentals of Tool Engineering design, S.K. Basu, S.N. Mukherjee, R. Mishra, Oxford & IBH Publishing co.
2. Technology of Machine Tools, Krar, Gill, Smid, Tata Mc Graw Hill
3. Jigs & Fixture Design, Edwrd G Hoffman, Cengae Learning.

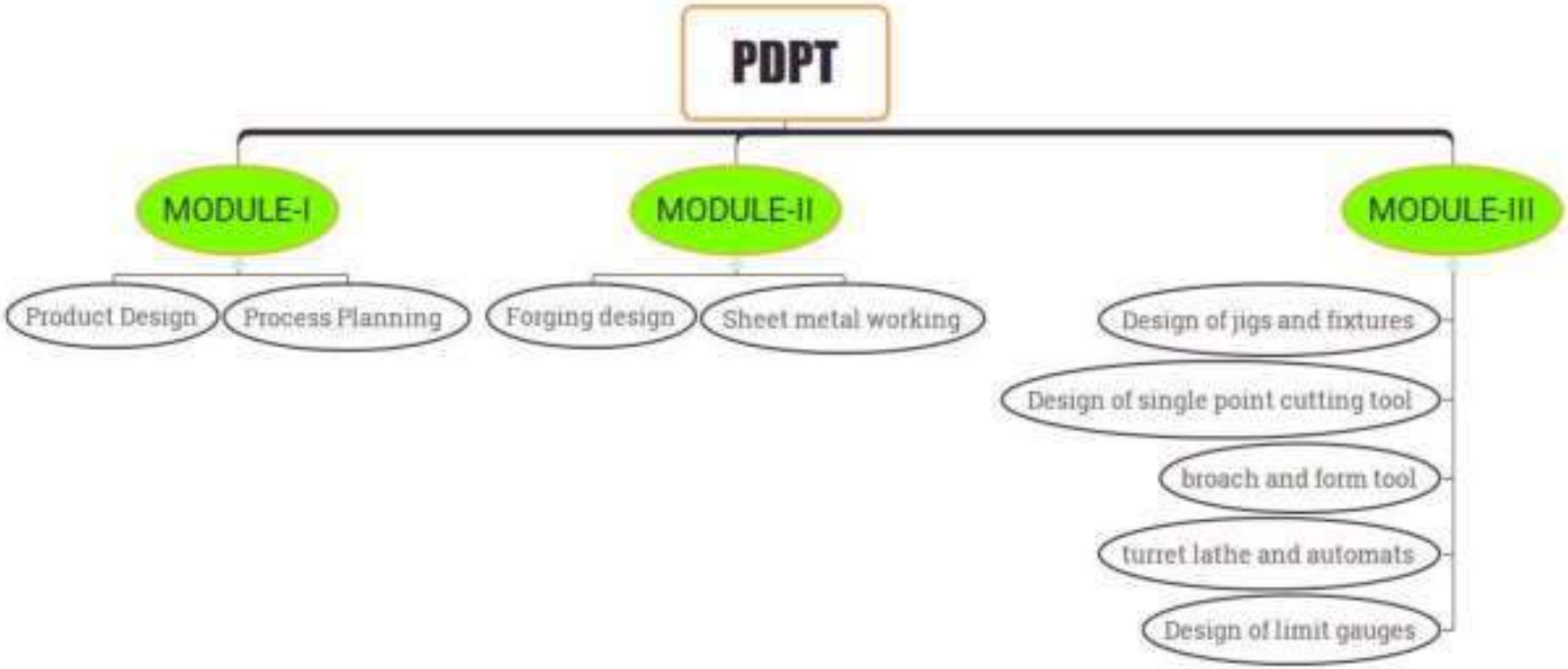
PDPT
MODULE-I
Product Design
Process Planning
MODULE-II
Forging design
Sheet metal working
MODULE-III
Design of jigs and fixtures
Design of single point cutting tool
broach and form tool
turret lathe and automats
Design of limit gauges

MODULE - III

Design of Jigs and Fixtures

- Jigs and fixtures are production tools used to accurately manufacture duplicate and interchangeable parts. Jigs and fixtures are specially designed so that large numbers of components can be machined or assembled identically, and to ensure interchangeability of components.

PURPOSE AND ADVANTAGES OF JIGS & FIXTURES

1) It reduces or sometimes eliminates the efforts of marking, measuring and setting of workpieces on a machine and maintains the accuracy of performance.

2) The workpiece and tool are relatively located at their exact positions before the operation automatically within negligible time. So, it reduces product cycle time.

3) Variability of dimension in mass production is very low so manufacturing processes supported by use of jigs and fixtures maintain a consistent quality.

(4) Due to low variability in dimension assembly operation becomes easy, low rejection due to les defective production is observed.

(5) It reduces the production cycle time so increases production capacity. Simultaneously working by more than one tool on the same workpiece is possible.

(6) The operating conditions like speed, feed rate and depth of cut can be set to higher values due to rigidity of clamping of workpiece by jigs and fixtures.

(7) Operators working becomes comfortable as his efforts in setting the workpiece can be eliminated.

(8) Semi-skilled operators can be assigned the work so it saves the cost of manpower also.

(9) There is no need to examine the quality of product provided that quality of employed jigs and fixtures is ensured.

JIGS

It is a work holding device that holds, supports and locates the workpiece and guides the cutting tool for a specific operation.

Example of JIGS:

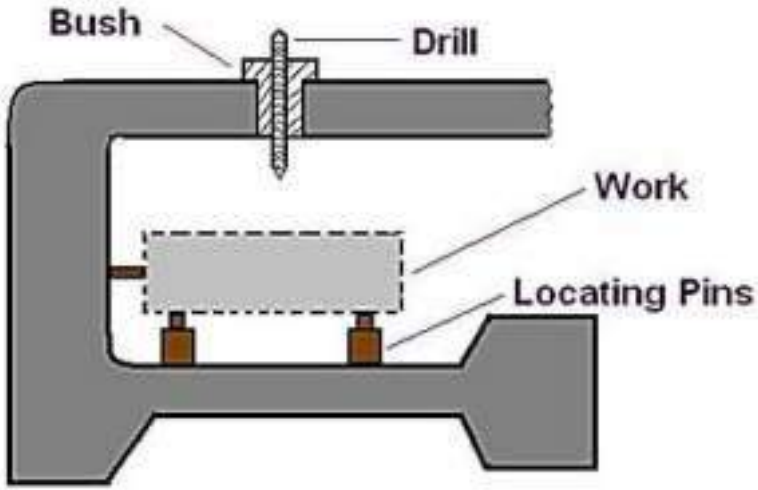

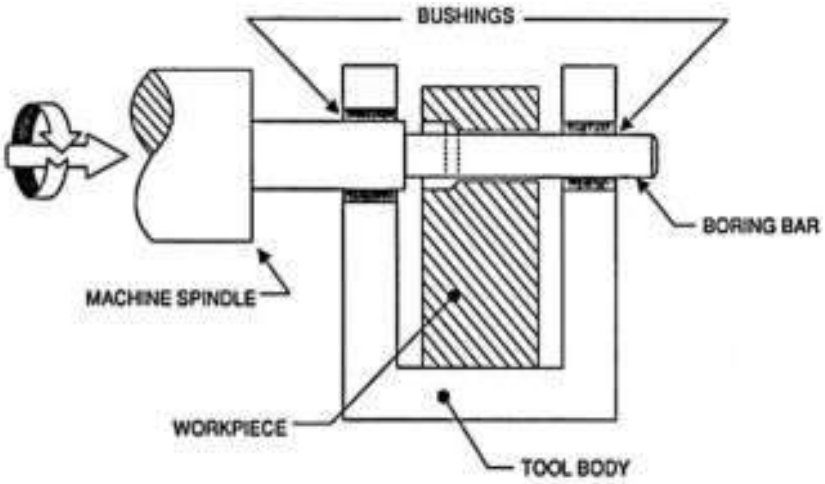


Methods to manufacture (JIGS)
(a) Machining
(b) Forging
(c) Casting
(d) Complicated

Different types of JIGS

Template Jig

This is a simple plate of metal or wood which carries correct locations of holes to be made in the workpiece. Size of template jig should be same as that of the workpiece. It is overlapped with the workpiece and drilling is done quickly. Use of this jig avoids the marking operation completely.

Open Type Jig

In this jig the top is kept open and workpiece is placed on the base of the jig and the drill plate. Carrying the drill bushes is placed on the top to guide the tool. After the operation is over, the drill plate is removed and workpiece is replaced.

Box Type Jig

Its construction is like a box and it is used for the components having irregular shape and to be operated at different places. This type of jig provides rigid support, so machining on the various places of workpiece becomes comfortable.

Pot Type Jig

This jig is used for drilling holes in hollow cylindrical components having smaller size. Here the body of the jig is like a pot that is used to accommodate the workpiece comfortably. Location on the inside surface of the component is provided by the clamp projecting from the bush plate located over the top of the workpieces.

Multi-station jigs

These jigs are designed for multi-spindle machine where many operations can be performed simultaneously. Each spindle of the machine carries a different tool to perform a different operation. Tools and spindles are arranged in the sequence in which operations are to be performed.

Plate Type jig

If the work is to be done on very large scale, an improvement can be made to template jig that is plate type jig. This uses a plate having drill pushes and suitable means to hold and locate the works that it can be clamped to the plate and holes drilled directly through the bushes in correct positions.

Swinging Leaf Type Jig

This type of jig carries a leaf or plate, arranged at the top or on one side, which is capable of swinging about a fulcrum. It is normally the drill plate itself which is pivoted about a point at its one end.

Solid Type Jig

This is also used for drilling holes in articles of simple shapes and relatively smaller sizes. This is made of standard section of rolled steel.

Index jigs

This type of jig is equipped with the facility of indexing which creates positional division of the workpiece suitably. This jig is used for quick drilling of equidistant holes on the circular surface of the workpiece. By means of indexing device a hole is drilled then the workpiece is moved (indexed) to next position under the drill bush for drilling automatically.

Universal Jig

As indicated by the name universal jigs are meant to do large number of operations. These may have replaceable elements on them. Selection and mounting of an element depends on the type of operation to be performed.

Design of Fixtures

FIXTURES

It is a work holding device that holds, supports and locates the workpiece for a specific operation but does not guide the cutting tool.

Example of FIXTURES:

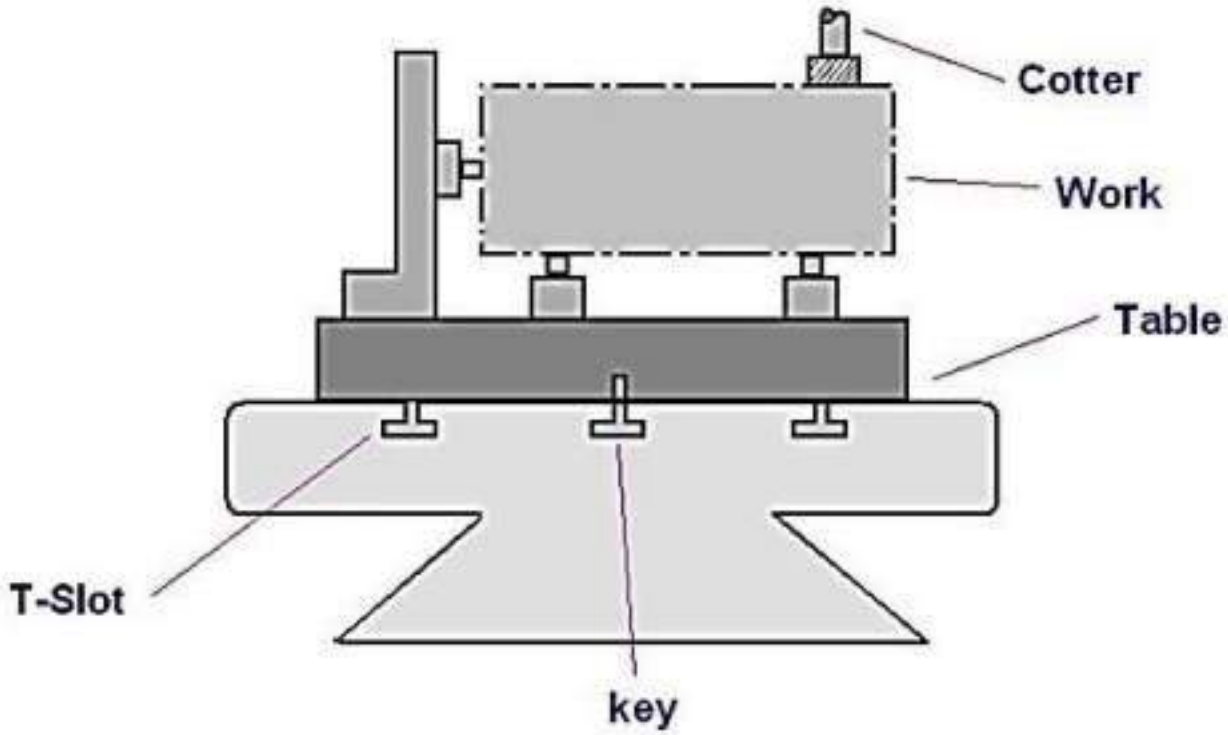

Different types of FIXTURES

- Turning fixtures
- Milling fixtures

  Fixtures used to perform different types of milling operations are called milling fixtures. The fixture is probably located on the table of the machine and secured in position by means of bolts and nuts. The workpiece located on the base of fixture and clamped. The fixture and associated jigs holds the workpiece and direct the tool to right position by avoiding frequent measurement and marking. The experience of varying forces by the workpiece are also overcome by the concerning fixtures and jigs. Proper locations of the fixture on the machine table is usually achieved with the help of two rons provided under the fixture base. These rons enter a T-slot of the table to provide the required location. The fixture base can then be secured to the table by means of T-bolts and nuts.
- Fixture for grinding
- Fixture for broaching
- Fixture for boring/drilling
- Tapping fixture
- Fixture for welding

  Welding fixtures are normally designed to hold and support the various components (workpieces) to be welded. It is necessary to support them in a proper location which is capable of preventing distortions in workpieces during welding. For this the locating elements need to be placed carefully, clamping has to be light but firm, placement of clamping elements has to be clear of the welding area and the fixture has to be quite stable and rigid to withstand the welding stresses. There is no limit of designing a welding fixture. Its design depends on and driven by the hard facts that are what you want, and how to overcome the problems appearing with the current fixture. Keeping the defect free fast production rate as major target.
- Assembling fixture

How do jigs and fixtures differ

JIGS	FIXTURES
1. It is a work holding device that holds, supports and locates the workpiece and guides the cutting tool for a specific operation	1. It is a work holding device that holds, supports and locates the workpiece for a specific operation but does not guide the cutting tool
2. Jigs are not clamped to the drill press table unless large diameters to be drilled and there is a necessity to move the jig to bring one each bush directly under the drill.	2. Fixtures should be securely clamped to the table of the machine upon which the work is done.
3. The jigs are special tools particularly in drilling, reaming, tapping and boring operation.	3. Fixtures are specific tools used particularly in milling machine, shapers and slotting machine.
4. Gauge blocks are not necessary.	4. Gauge blocks may be provided for effective handling.
5. Lighter in construction.	5. Heavier in construction.

Factors to be considered for design of Jigs and Fixtures

1. Component

1. Design to be studied carefully.
2. Ensure work is performed in a proper sequence.
3. Maximum operations should be performed on a machine in single setting.

2. Capacity of the machine

Careful consideration to be performed on type and capacity of machine.

3. Production requirements

Design to be made on basis of actual production requirements. Then comes decision on manual and automatic locating arrangements.

4. Location

1. Location should ensure equal distribution of forces throughout all sequence of operations.
2. Location should be hard resistant, wear resistant and high degree of accuracy.
3. Movement of workpiece should be restricted.
4. Should be tool provided to avoid improper locations of the workpiece.
5. Should facilitate easy and quick loading of workpiece.
6. Redundant locators should be avoided.
7. Sharp corners must be avoided.
8. At least one datum surface should be established.

5. Loading and Unloading arrangements

1. There should be adequate clearance for loading and unloading. Hence process becomes quick and easy.
2. Size variation must be accepted.
3. It should be hardened material and non-sticky.

6. Clamping arrangements

1. Quick acting clamps must be used as far as possible.
2. The clamping should not cause any deformation to the workpiece.
3. It should always be arranged directly above points supporting the work.
4. Power driven clamps are favoured as they are quick acting, controllable, reliable and operated without causing any fatigue to the operators.

7. Clearance between jig and Component

1. To accommodate various sizes of work
2. Chips to pass out of the opening between them

8. Ejectors

1. To remove work from close fitting locators.
2. Speeds up unloading of the part from the tool and hence production rate.

9. Base and Body construction

Methods used: Machining, Forging and machining, Casting, Fabricating, welding.

10. Tool guiding and cutter setting

By adjusting the machine or using cutter setting block, the cutter is set relative to the work in a fixture. The drill bushes fitted on jig plates guides the tools.

11. Rigidity and vibration

1. Must possess enough rigidity and robustness.
2. Should not vibrate as it may lead to unwanted movement of workpiece and tools.

12. Safety

Operation should be assured full safety.

13. Cost

1. Should be simple as possible.
2. Cost incurred should be optimum.

14. Materials generally used

1. Jig body= CI
2. Dowel= MS
3. Drill Bush= Carbide
4. Pin= MS
5. Bolt= MS

Locating – principles and methods

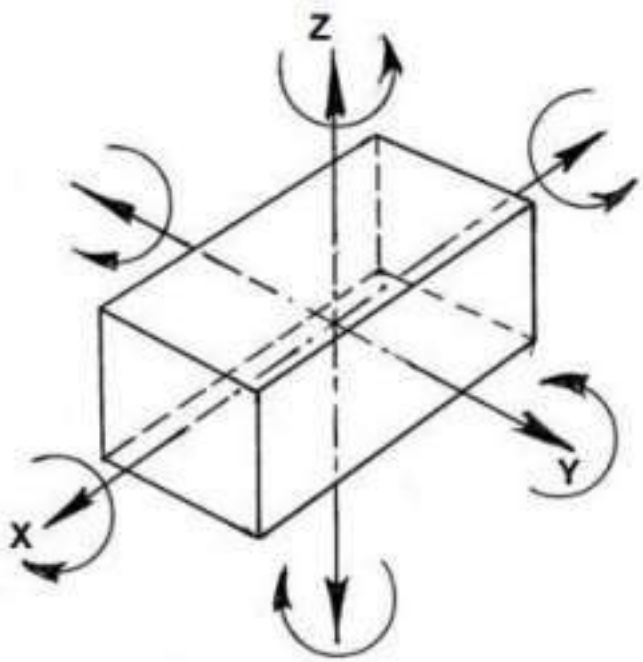

Possible degrees of freedom of a solid body.
Arresting all degrees of freedom of a blank in a fixture.

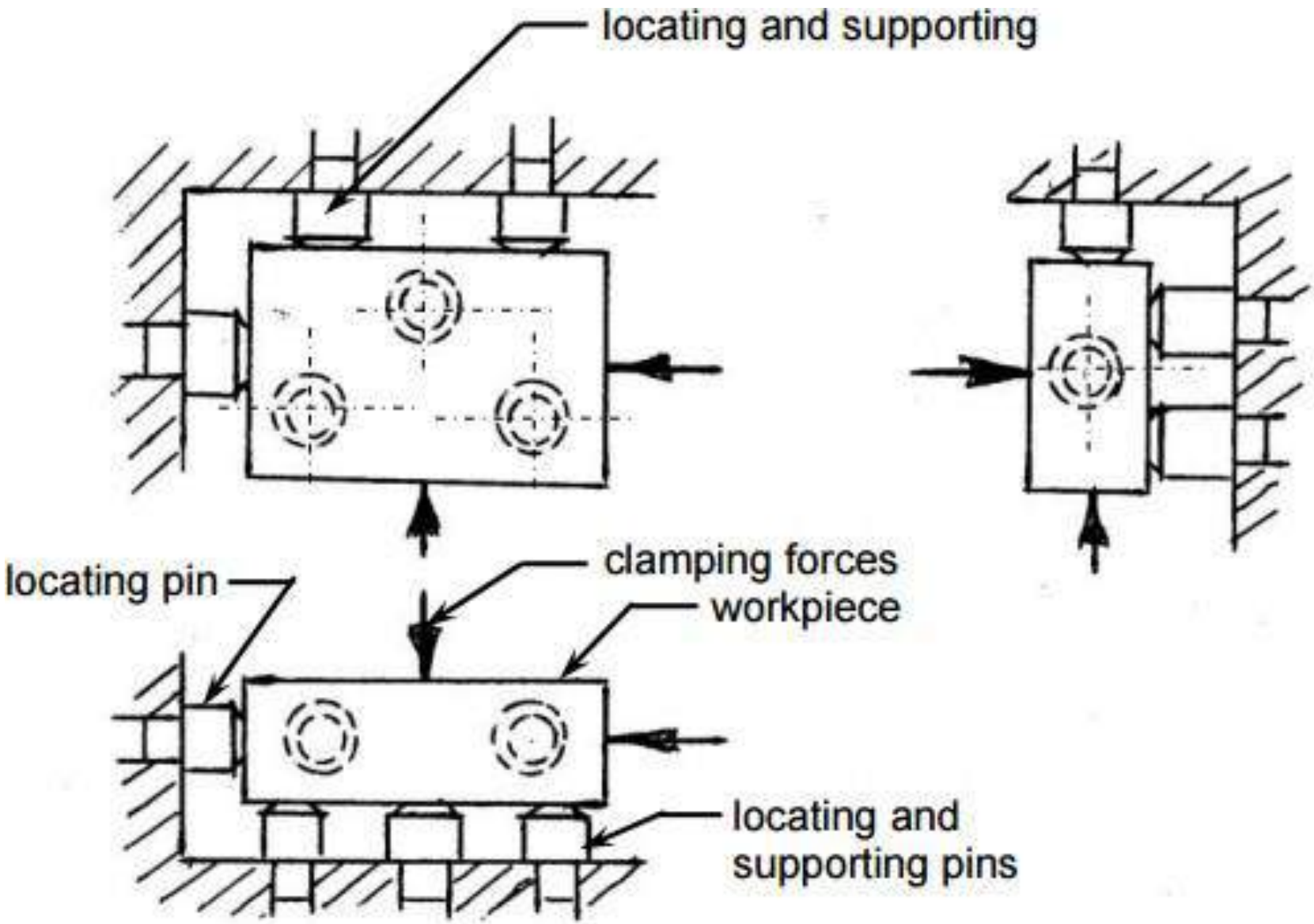
locating and supporting
locating pin
clamping forces
workpiece
locating and
supporting pins

Degree of Freedom

Degree of Freedom is defined as number of independent motion a body has

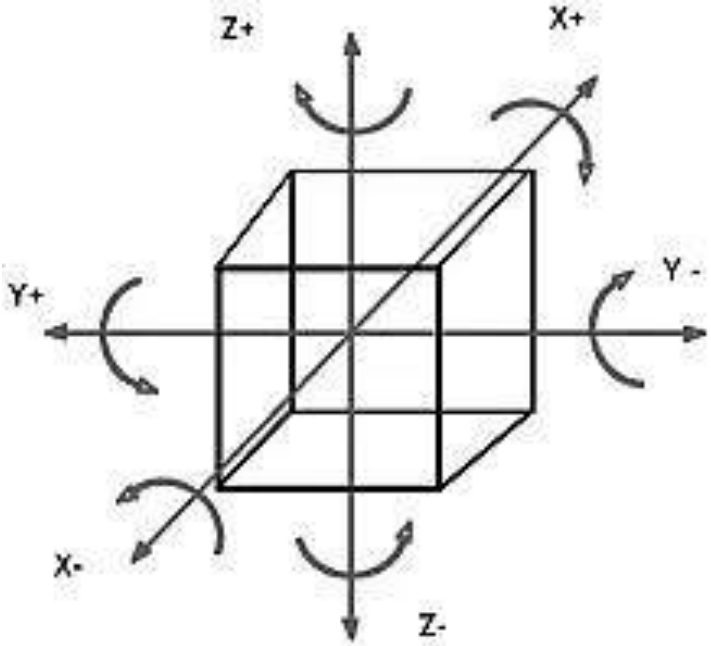

3-2-1 Principle of Clamping Workpiece

It is principle of clamping widely used.

1) **3 Pin** are used at Bottom

It will restrict 4 Rotational motion (X,Y Axis) and 1 Translation motion (-Z Direction)

2) **2 Pin**

It will Restrict 2 Rotational Motion (Z Axis) and 1 Translation motion in (+X Direction)

3) **1 Pin**

It will restrict 1 Translation Motion (+Y)

And Pin 3-2-1 combined will restrict 9 Motion

And Remaining 3 Motion is used to set work-piece at desired location and can be restricted by Clamp.

(*Notation given i.e +X, -X . Changes according to views)

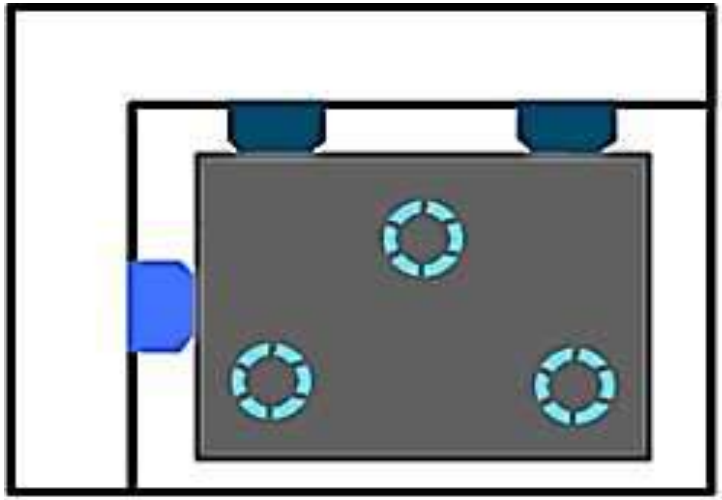


3 Pin
2 Pin
1 Pin

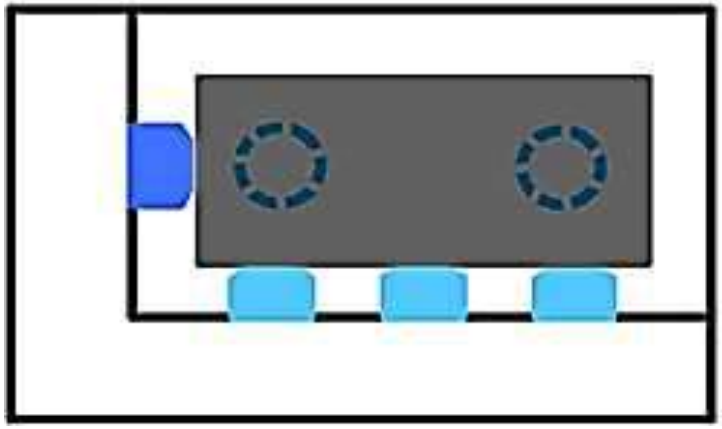

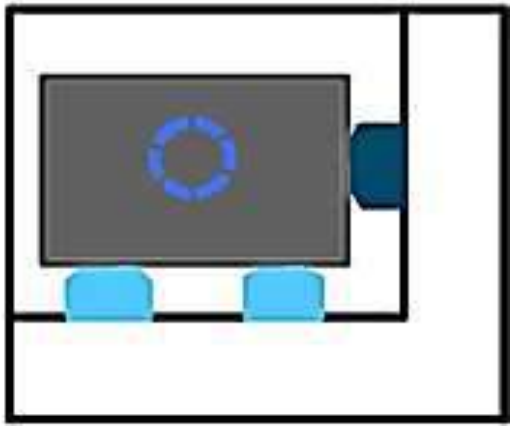

Some basic principles or rules need to be followed while planning for locating blanks in fixtures, such as

- One or more surfaces (preferably machined) and / or drilled / bored hole(s) are to be taken for reference
- The reference surfaces should be significant and important feature(s) based on which most ofthe dimensions are laid down
- Locating should be easy, quick and accurate
- In case of locating by pin, the pins and their mounting and contact points should be strong, rigid and hard
- A minimum of three point must be used to locate a horizontal flat surface
- The locating pins should be as far apart as feasible

- Vee block and cones should be used for self- locating solid and hollow cylindrical jobs
- Sight location is applicable to first – operation location of blank with irregular surfaces produced by casting, forging etc. when the bracket is first located on two edges to machine the bottom surface which will be used for subsequent locating.
- Adjustable locating pin(s) is to be used to accommodate limited part size variation

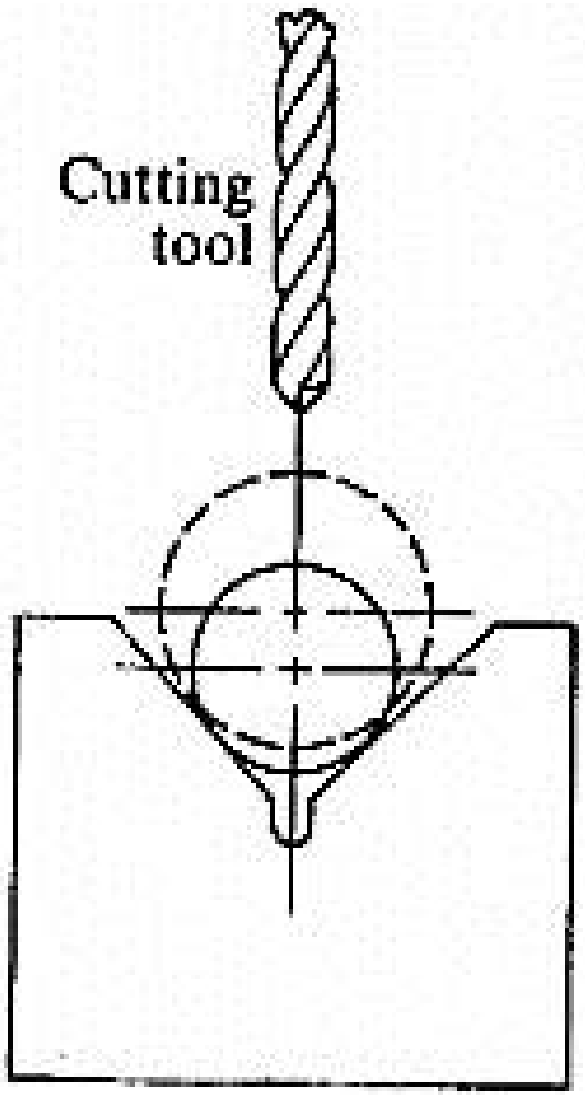

Locating by Vee block

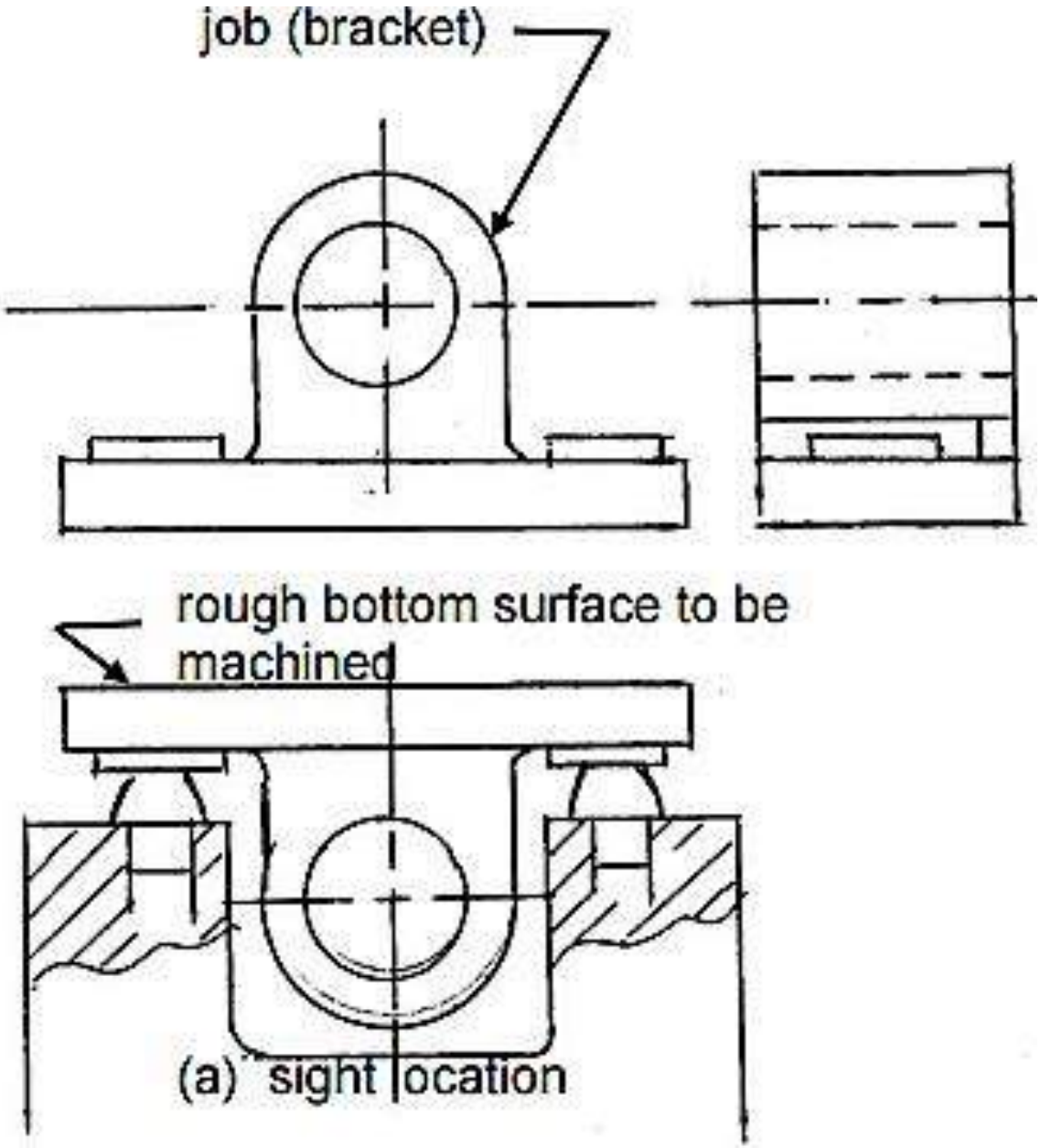

(a) sight location

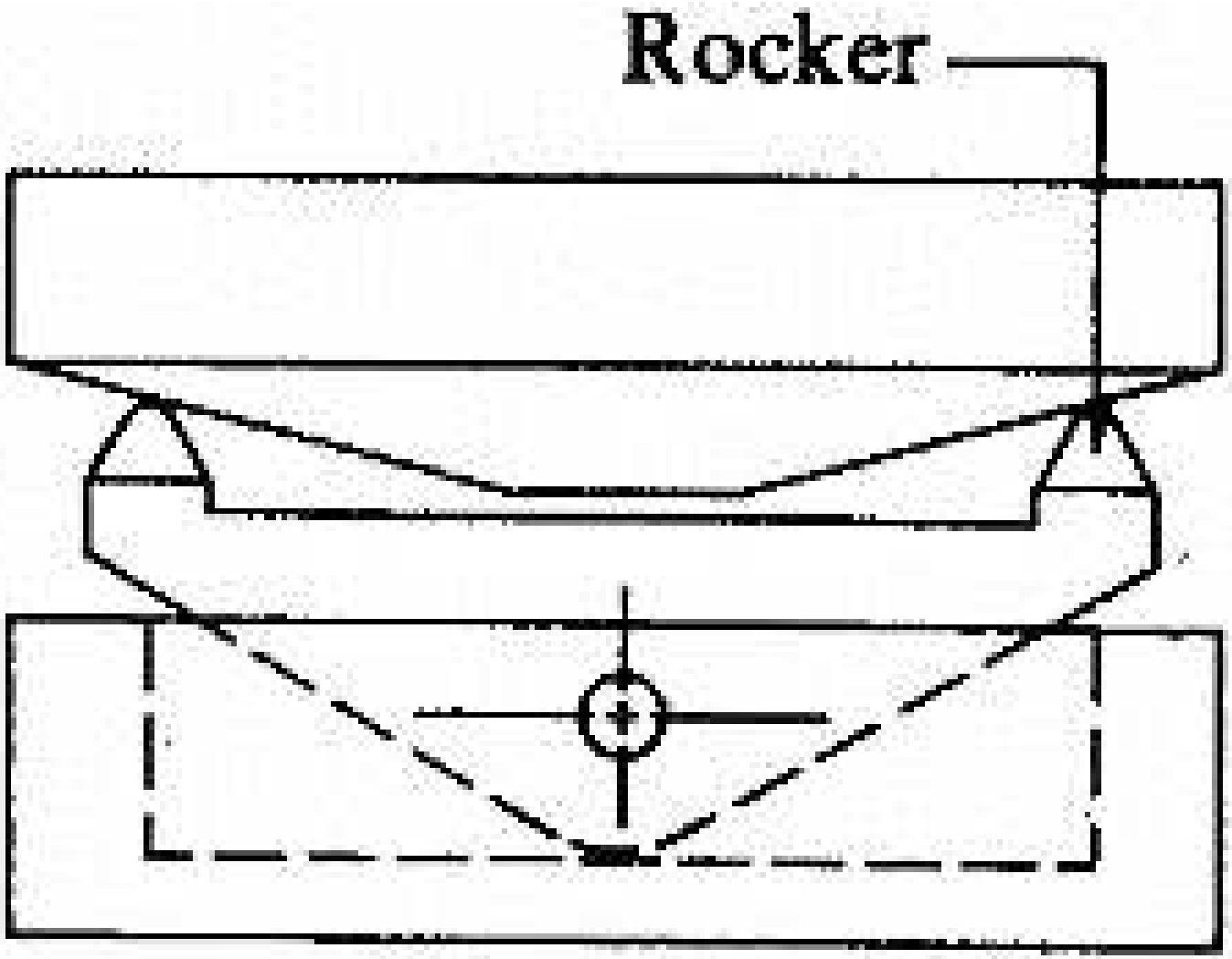

pivoted arm with two points

Locating blanks for machining in lathes

In lathes, where the job rotates, the blanks are located by

- ✓ fitting into self centering chuck
- ✓ fitting into 4 – independent jaw chuck and dead center
- ✓ in self – centering collets
- ✓ in between live and dead centers
- ✓ by using mandrel fitted into the head stock – spindle
- ✓ fitting in a separate fixture which is properly clamped on a driving plate which is coaxially fitted into the lathe spindle.

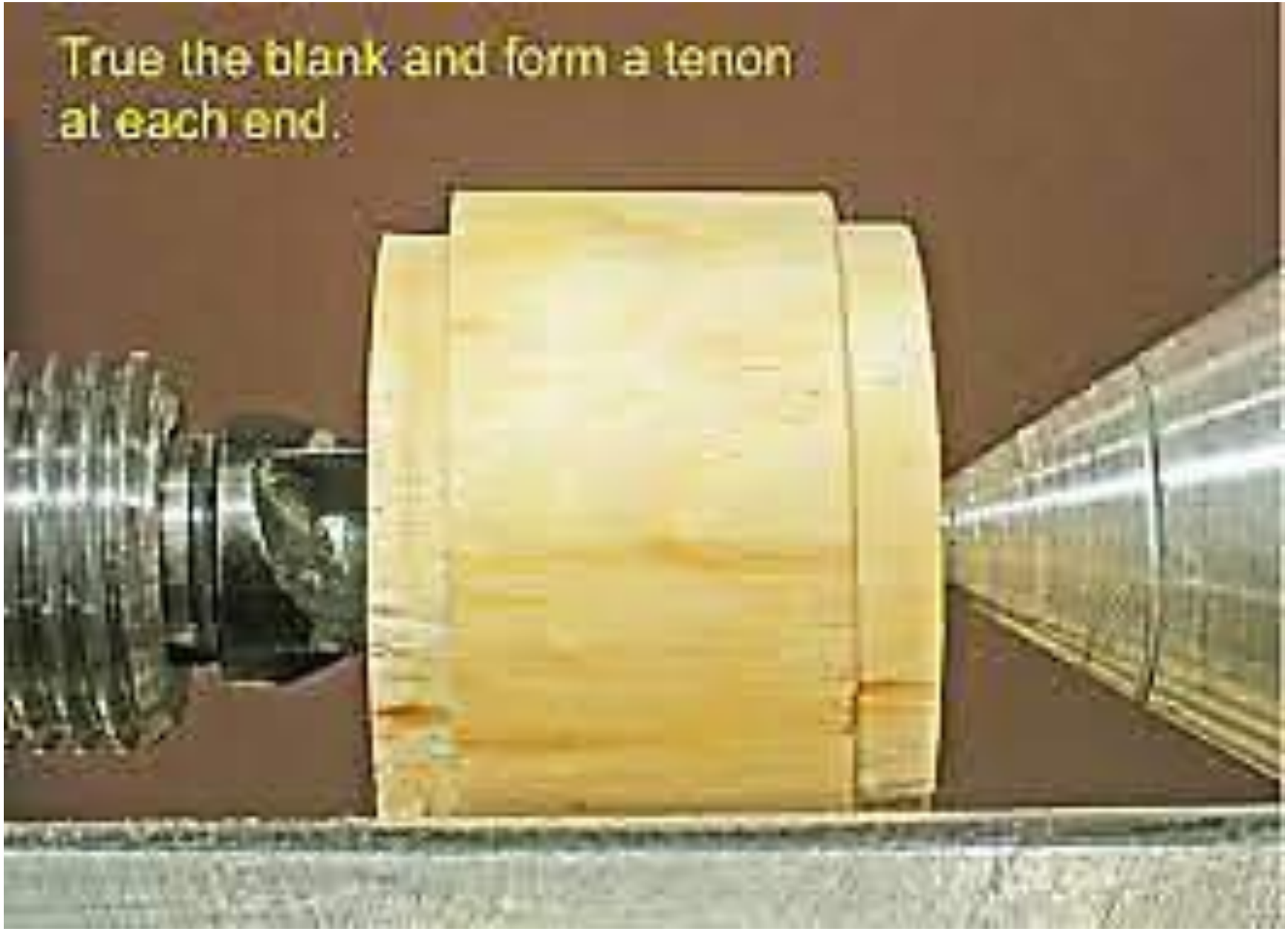
True the blank and form a tenon
at each end.

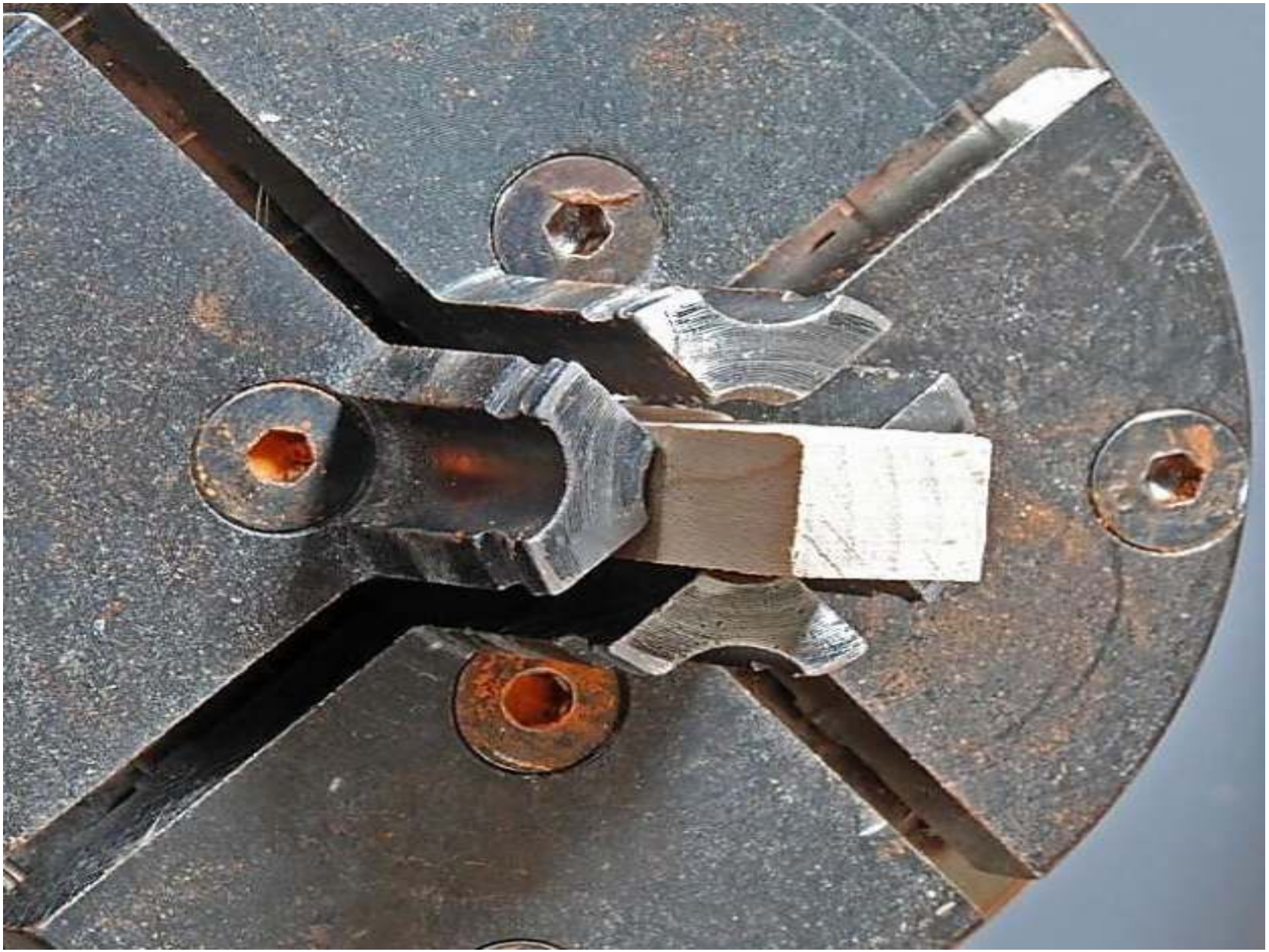

Locating for machining in other than lathes

- In machine tools like drilling machine, boring machine, milling machine, planning machine, broaching machine and surface grinding machine the job remains fixed on the bed or work table of those machine tools.
- Fixtures are mostly used in the aforesaid machine tools and jig specially for drilling, reaming etc. for batch production.

Locating by flat surfaces

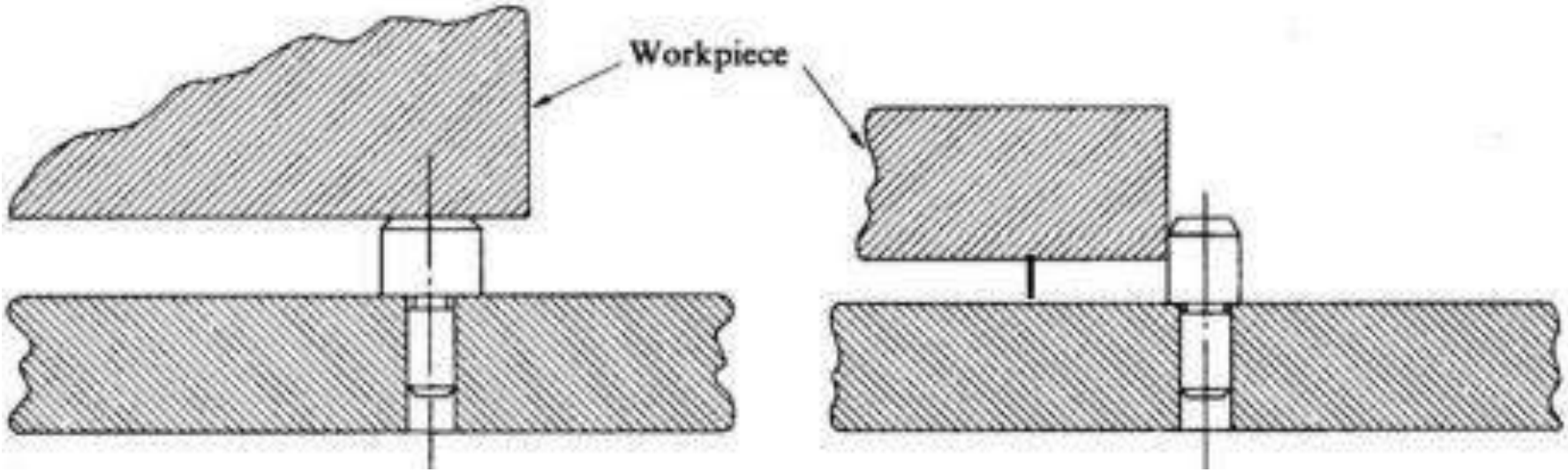

a) b)

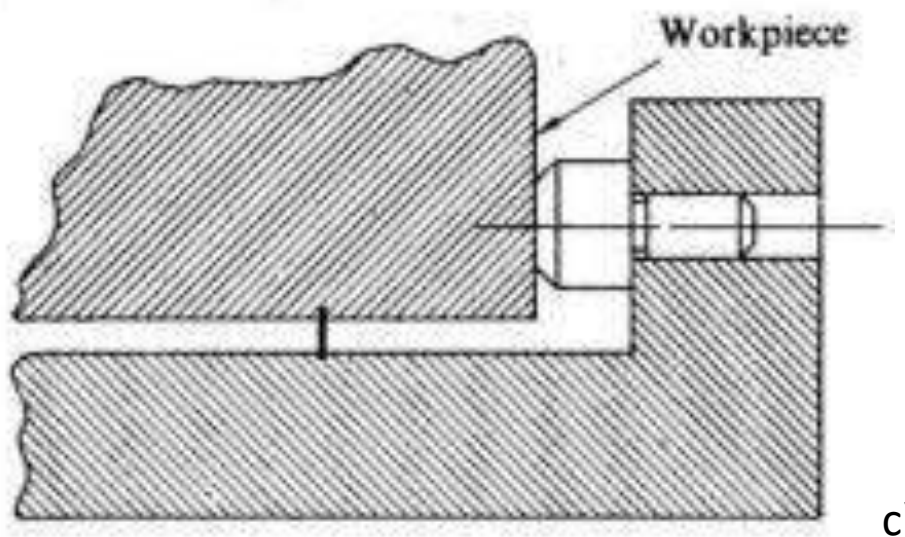

c)

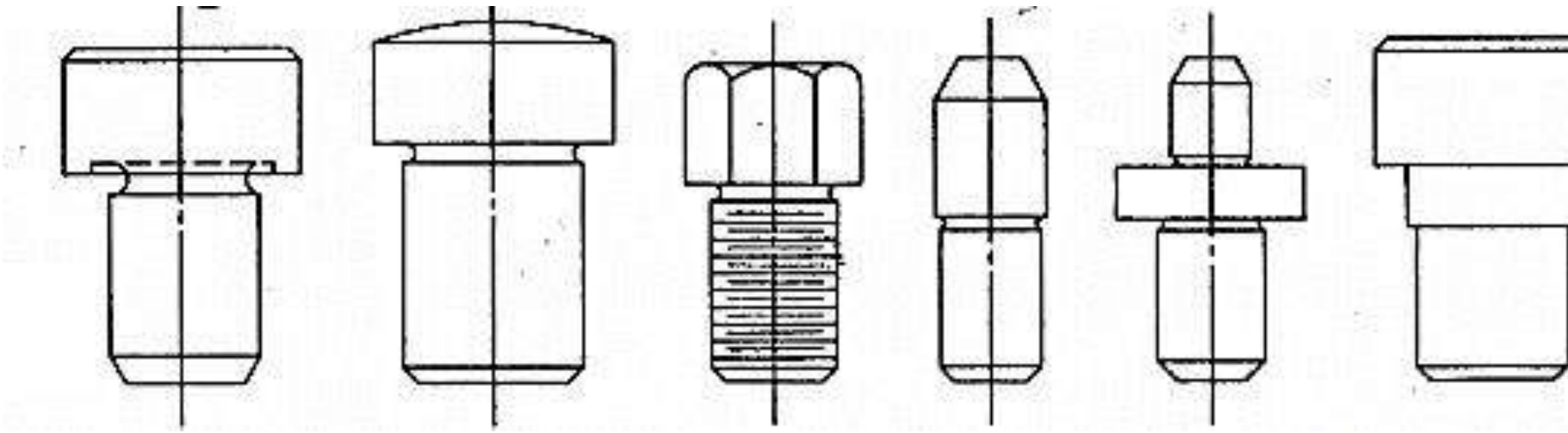

types of pins

In several cases, workpieces are located by premachined (drilled, bored or pierced) holes, such as;

* Locating by two holes where one of the pins has to be diamond shaped to accommodate tolerance on the distance between the holes and their diameters
* Locating by one hole and an external pin which presents rotation of the blank around the inner pin
* Locating by one hole and one Vee-block

- **Locating by holes**

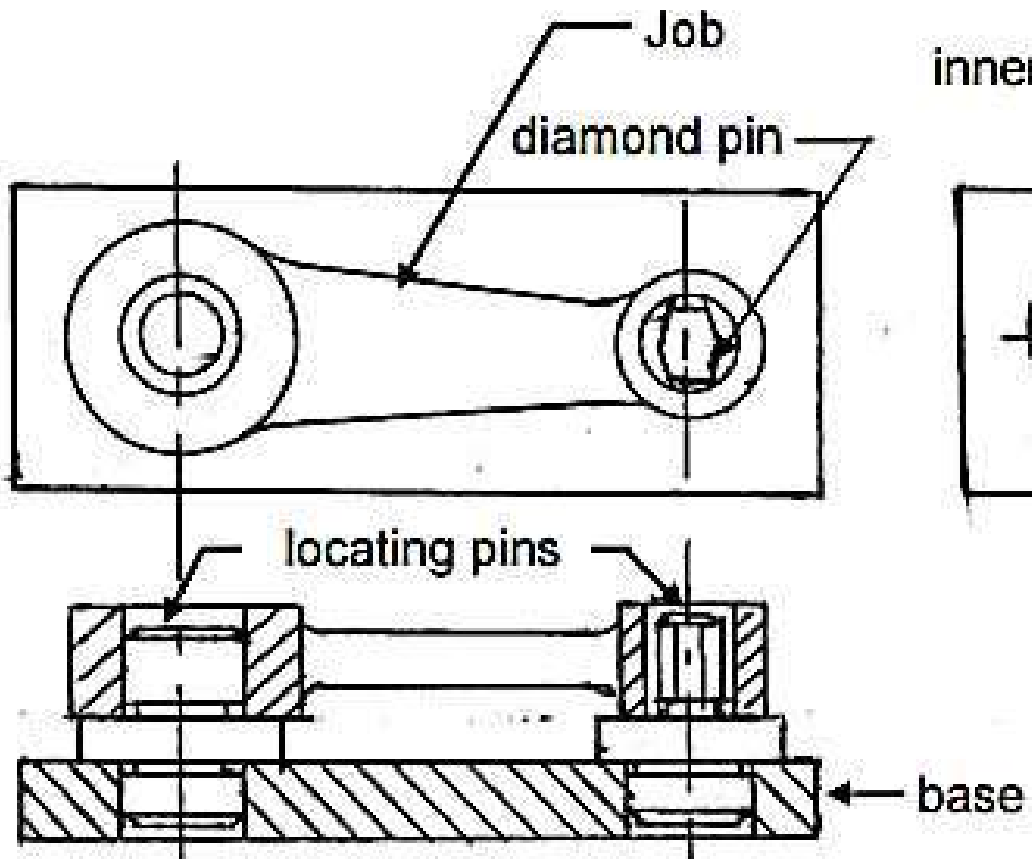

locating by two holes

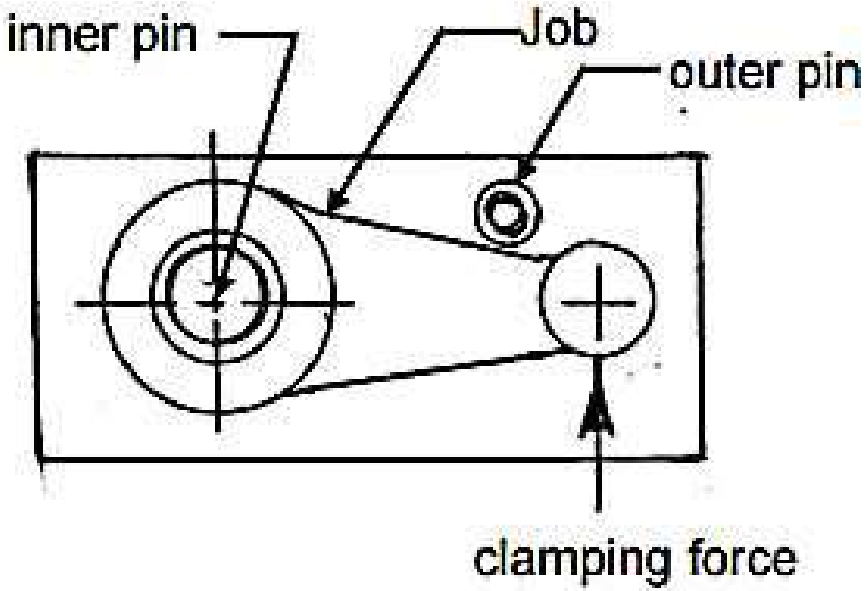

locating by one hole

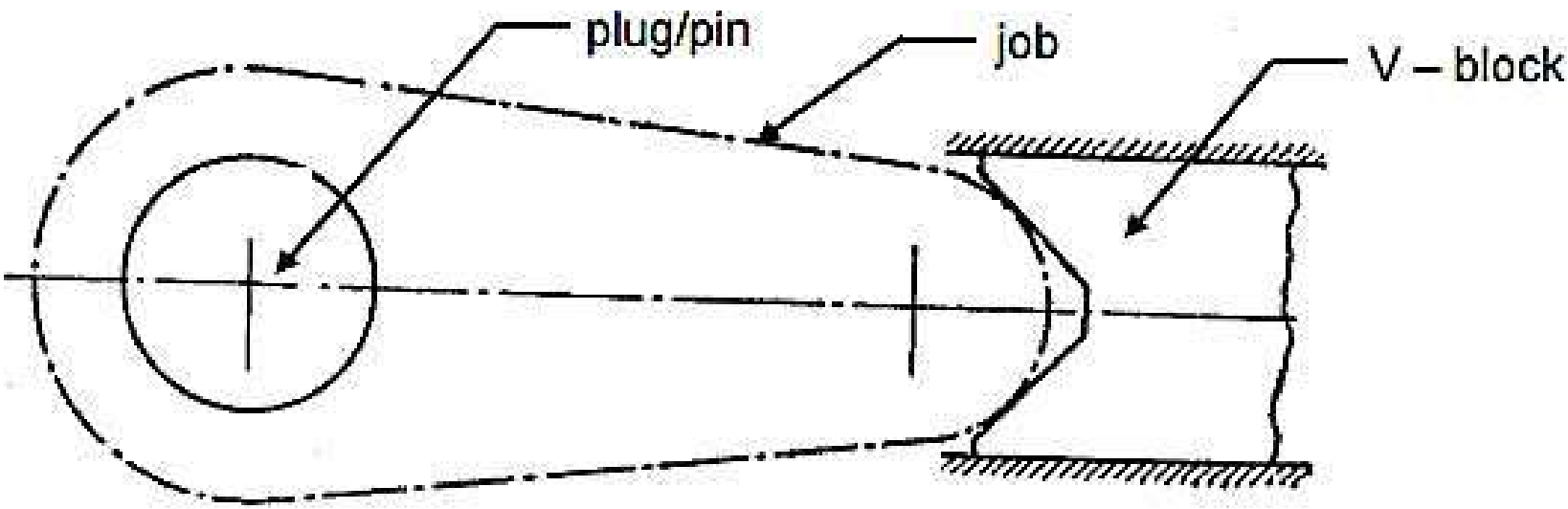

Locating by a pin and Vee block.

LOCATING ON MANDREL OR PLUG

Locating on mandrel or plug Ring or disc type work pieces are conveniently located on mandrel or single plug.

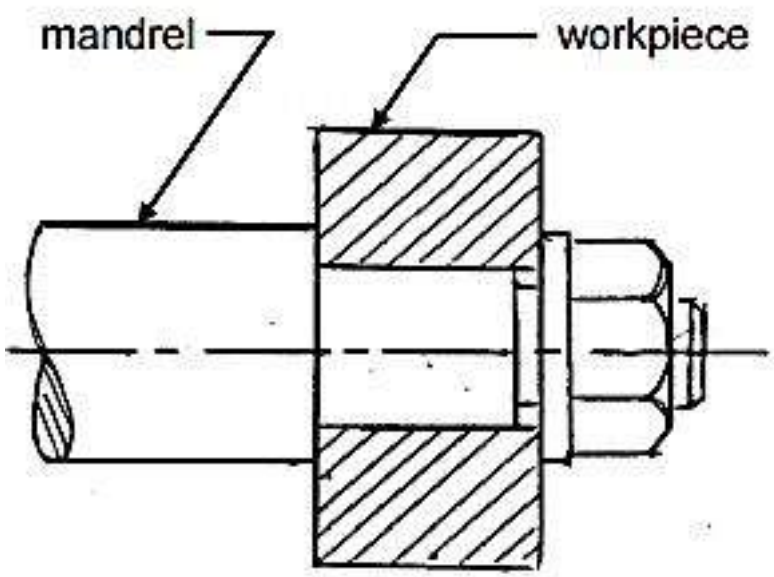

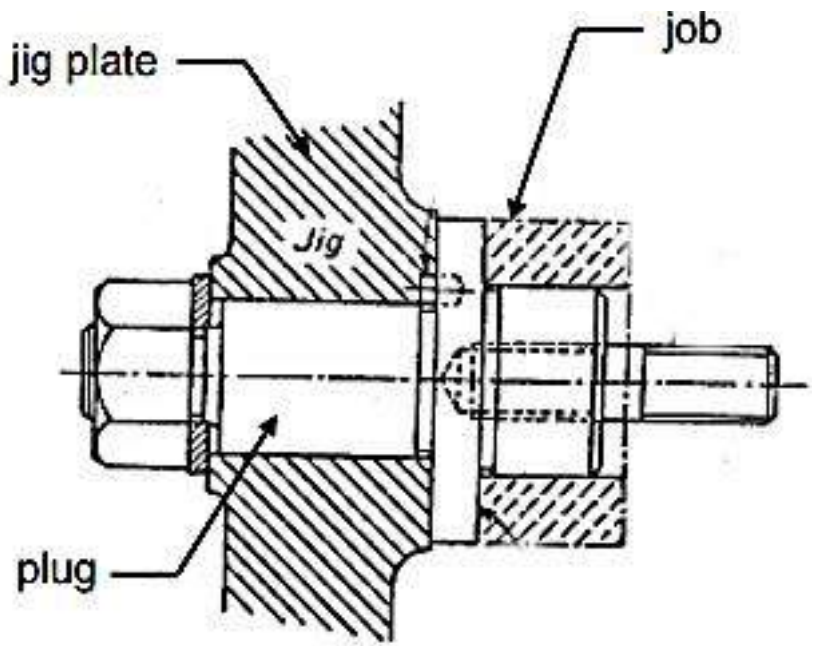

Supporting – principles and methods

Workpiece has to be properly placed in the jig or fixture not only for desired positioning and orientation but also on strong and rigid support such that the blank does not elastically deflect or deform under the actions of the clamping forces, cutting forces and even its own weight.

Basic principles or rules to be followed while designing or planning for supporting

- supporting should be provided at least at three points
- supporting elements and system have to be enough strong and rigid to prevent deformation due to clamping and cutting forces
- unsupported span should not be large to cause sagging
- supporting should keep the blank in stable condition under the forces
- for supporting large flat area proper recess is to be provided, for better and stable support.
- round or cylindrical workpieces should be supported (along with locating) on strong vee block of suitable size

- heavy workpieces with pre-machined bottom surface should be supported on wide flat areas, otherwise on flat ended strong pins or plugs.
- if more than three pins are required for supporting large workpieces then the additional supporting pins are to be spring loaded or adjustable
- additional adjustable supporting pins need to be provided to compensate part size variation
    - ∗ when the supporting surface is large and irregular
    - ∗ when clamping and cutting forces are large
- ring or disc type jobs, specially requiring indexing.

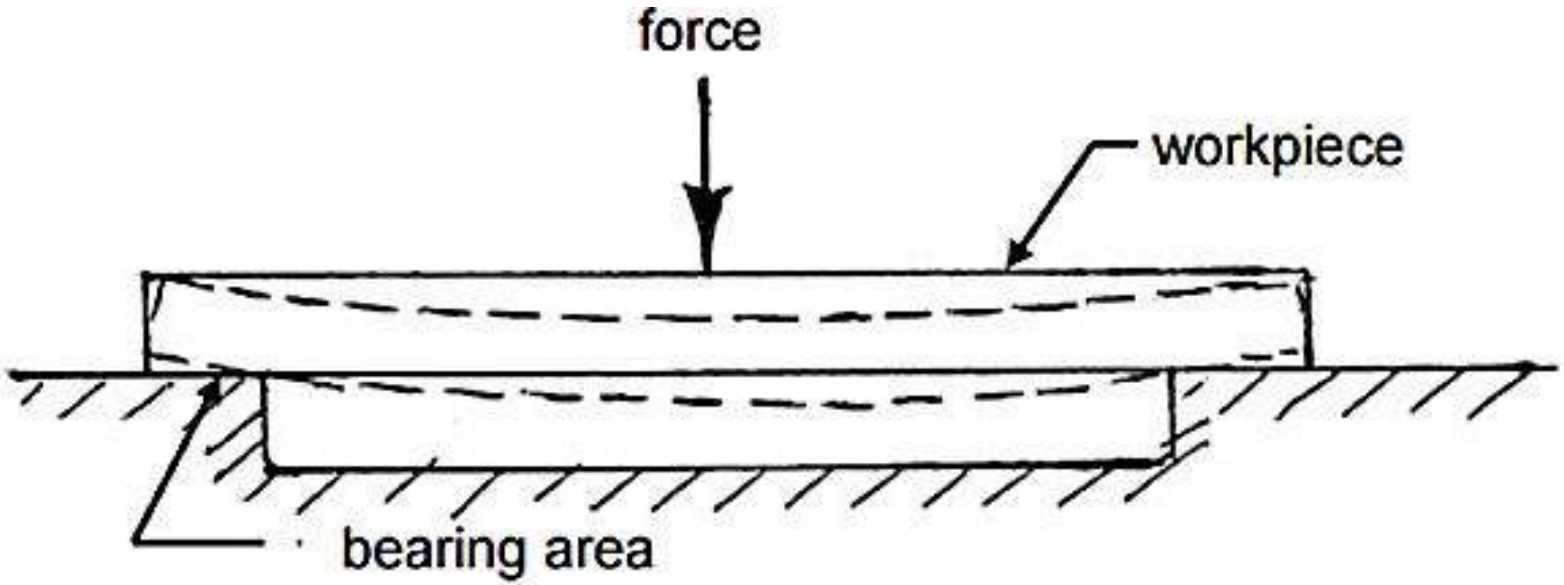

Deflection due to force(s) for wide gap in between supports.

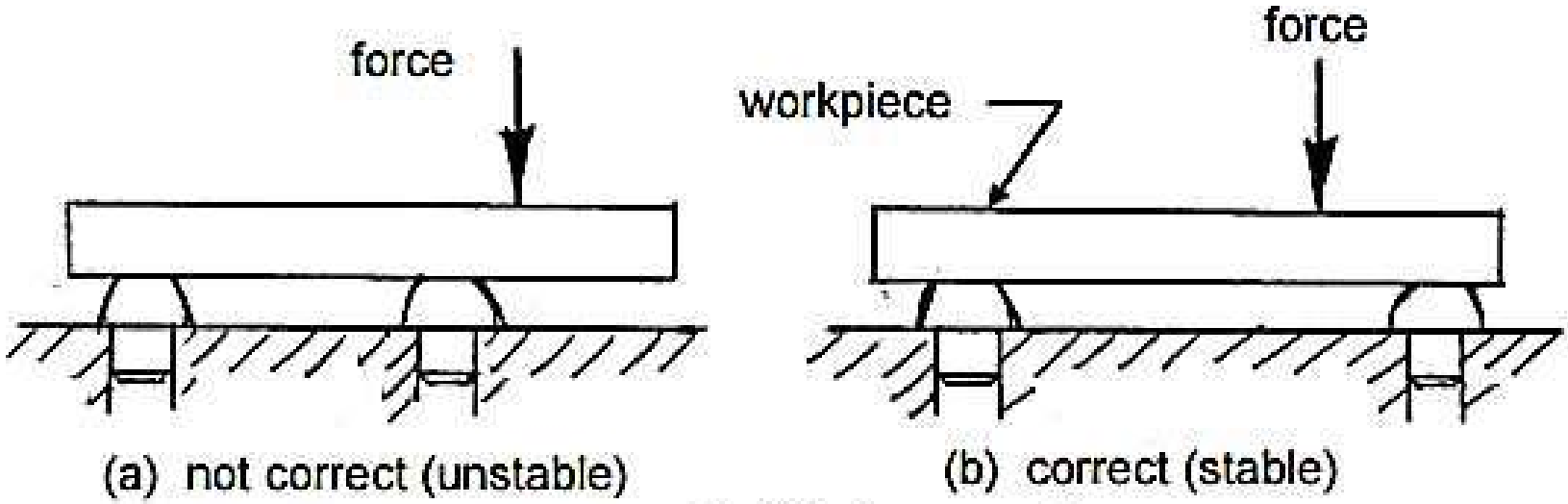

Stability in supporting.

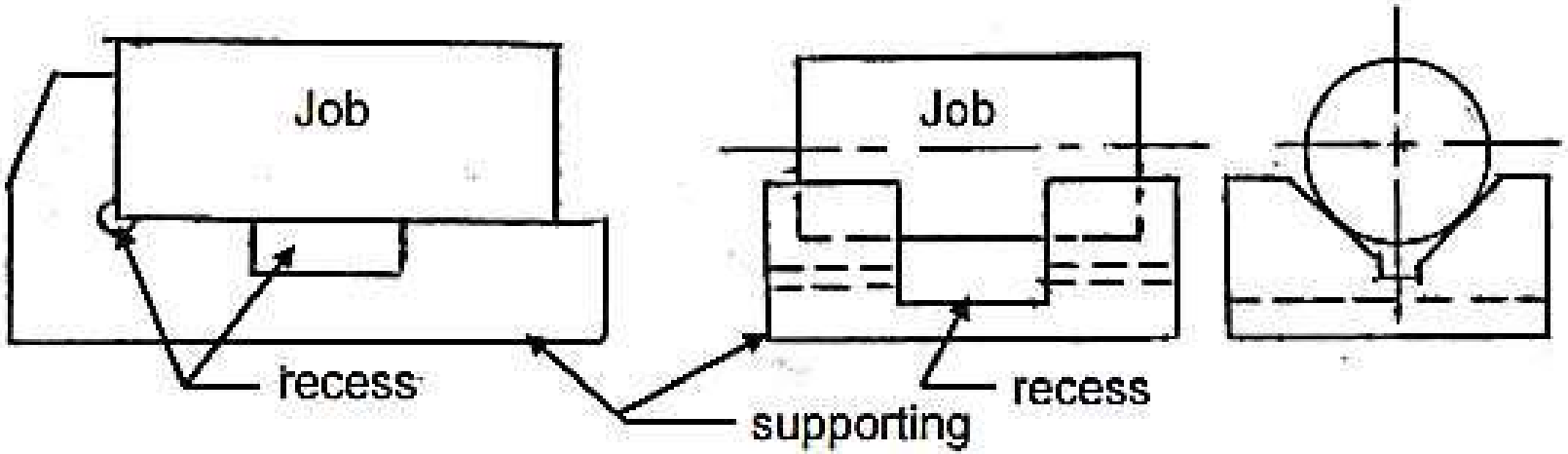

Recess in long span supporting.

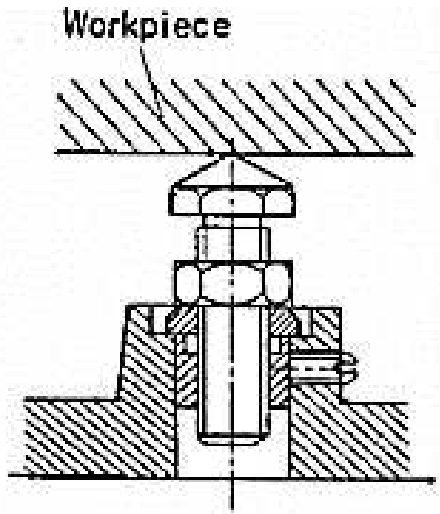

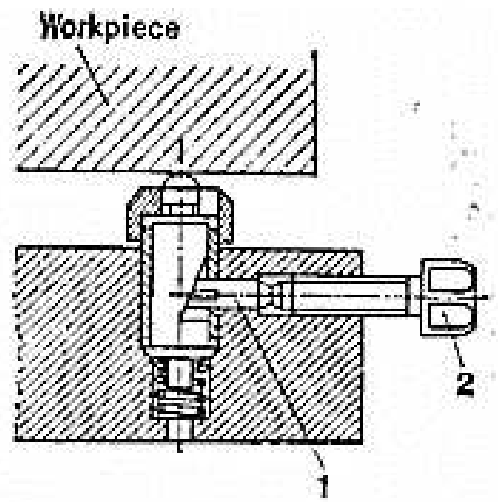

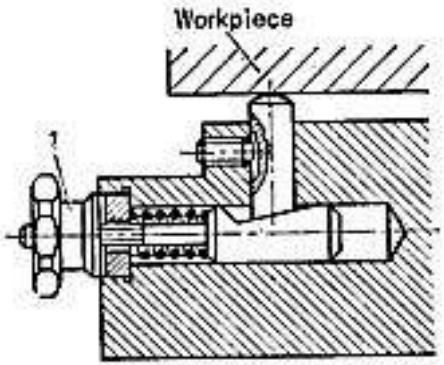

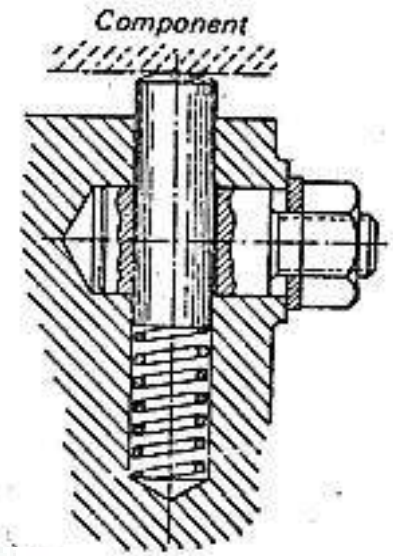

Adjustable supporting pins.

What is Clamping?

- Once workpiece is located, it is necessary to press it against locating surfaces and hold it there against the force acting upon it.
- The tool designer refers to this action as clamping and the mechanisms used for this action are known as clamps.

Clamping Principles

- Clamp should firmly hold the workpiece without distorting it.
- Should overcome the maximum possible force exerted on workpiece by using minimum clamping force
- Easy to operate
- Vibrations should tighten the cams and wedges in the clamp design (if any) and not loosen them.

Types of Clamping

- Mechanical Actuation Clamps
- Pneumatic and Hydraulic Clamps
- Vacuum Clamping
- Magnetic Clamping
- Electrostatic Clamping
- Non-Mechanical Clamping
- Special Clamping Operations

Clamping of workpiece in fixtures

In jigs and fixtures the workpiece or blank has to be strongly and rigidly clamped against the supporting surfaces and also the locating features so that the blank does not get displaced at all under the cutting forces during machining.

While designing for clamping the following factors essentially need to be considered :

- ✓ Clamping need to be strong and rigid enough to hold the blank firmly during machining
- ✓ Clamping should be easy, quick and consistently adequate
- ✓ Clamping should be such that it is not affected by vibration, chatter or heavy pressure
- ✓ Way of clamping and unclamping should not hinder loading and unloading the blank in the jig or fixture
- ✓ The clamp and clamping force must not damage or

deform the workpiece

- ✓ Clamping operation should be very simple and quick acting when the jig or fixture is to be used more frequently and for large volume of work o clamps, which move by slide or slip or tend to do so during applying clamping forces, should be avoided
- ✓ Clamping system should comprise of a smaller number of parts for ease of design, operation and maintenance
- ✓ The wearing parts should be hard or hardened and also be easily replaceable
- ✓ Clamping force should act on heavy part(s) and against supporting and locating

surfaces

- ✓ Clamping force should be away from the machining thrust forces
- ✓ Clamping method should be fool proof and safe
- ✓ Clamping must be reliable but also inexpensive

Various methods of clamping

Clamping method and system are basically of two categories:

(a) general type without much consideration on speed of clamping operations

(b) quick acting type

Principles of Clamping

- **Position**
- **Strength**
- **Productivity**
- **Operator fatigue**

Principles of Clamping

Position:

- Clamping system should be positioned **at thick sections** of the workpiece.
- Clamping should be positioned **to direct the clamping force on a strong, supported part of the workpiece.**
- Clamping on unsupported part **bends** slender workpieces, **affects accuracy of operation.**

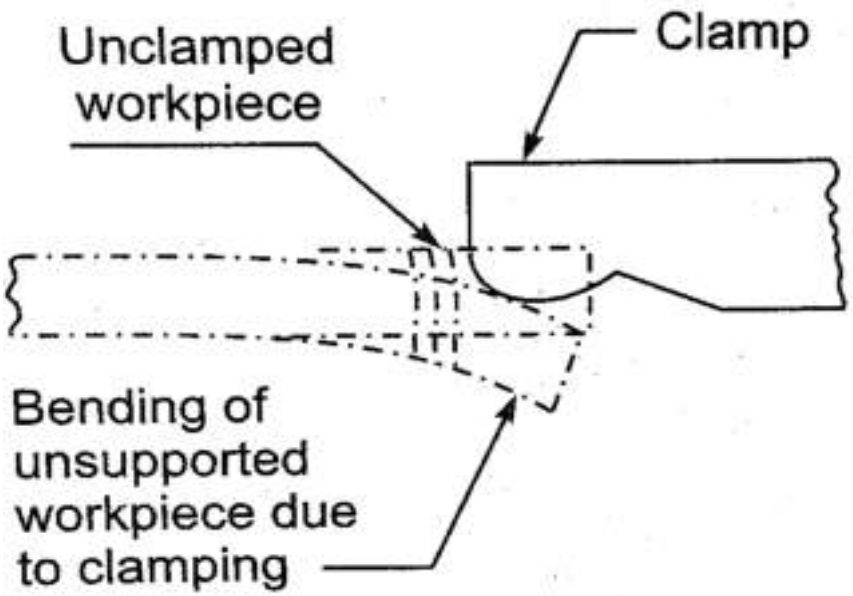

Distortion of unsupported workpiece

- Clamping system should not obstruct **loading and unloading of the workpiece.**
- Clamping system should not obstruct the **paths of cutting tool.**
- Operator should be able to operate clamps easily and safely
- A vertical hole drilled in the bent workpiece would become **angular** when the unclamped workpiece springs back to its original shape.

Principles of Clamping

- Clamping force shall be directed towards support / locators.

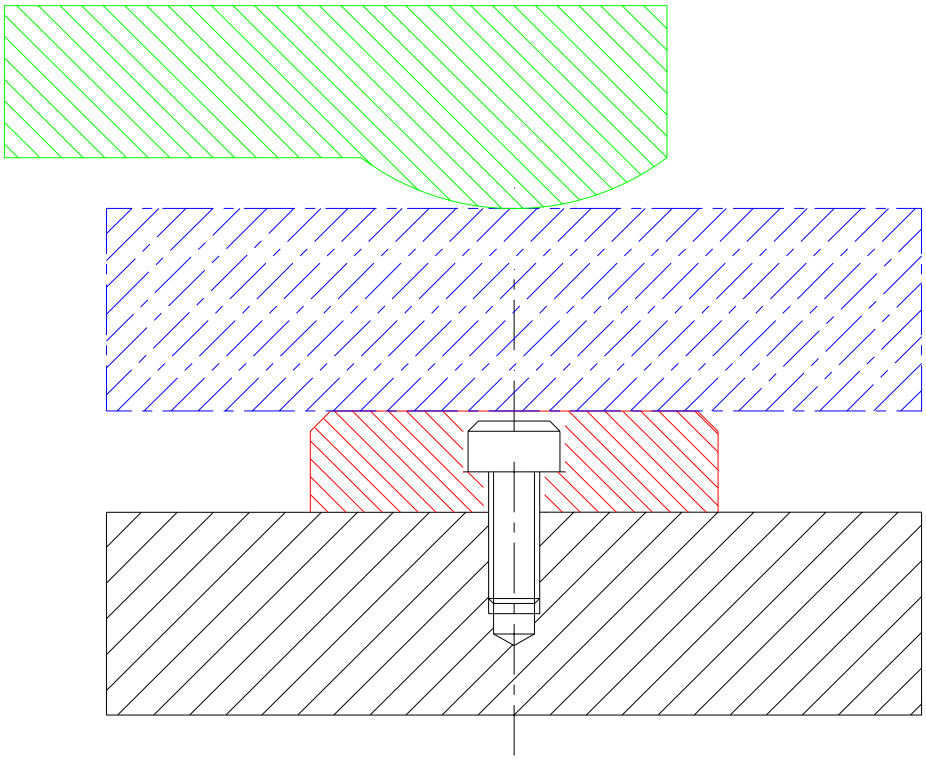

Principles of Clamping

- Clamp shall be directly in line with the support

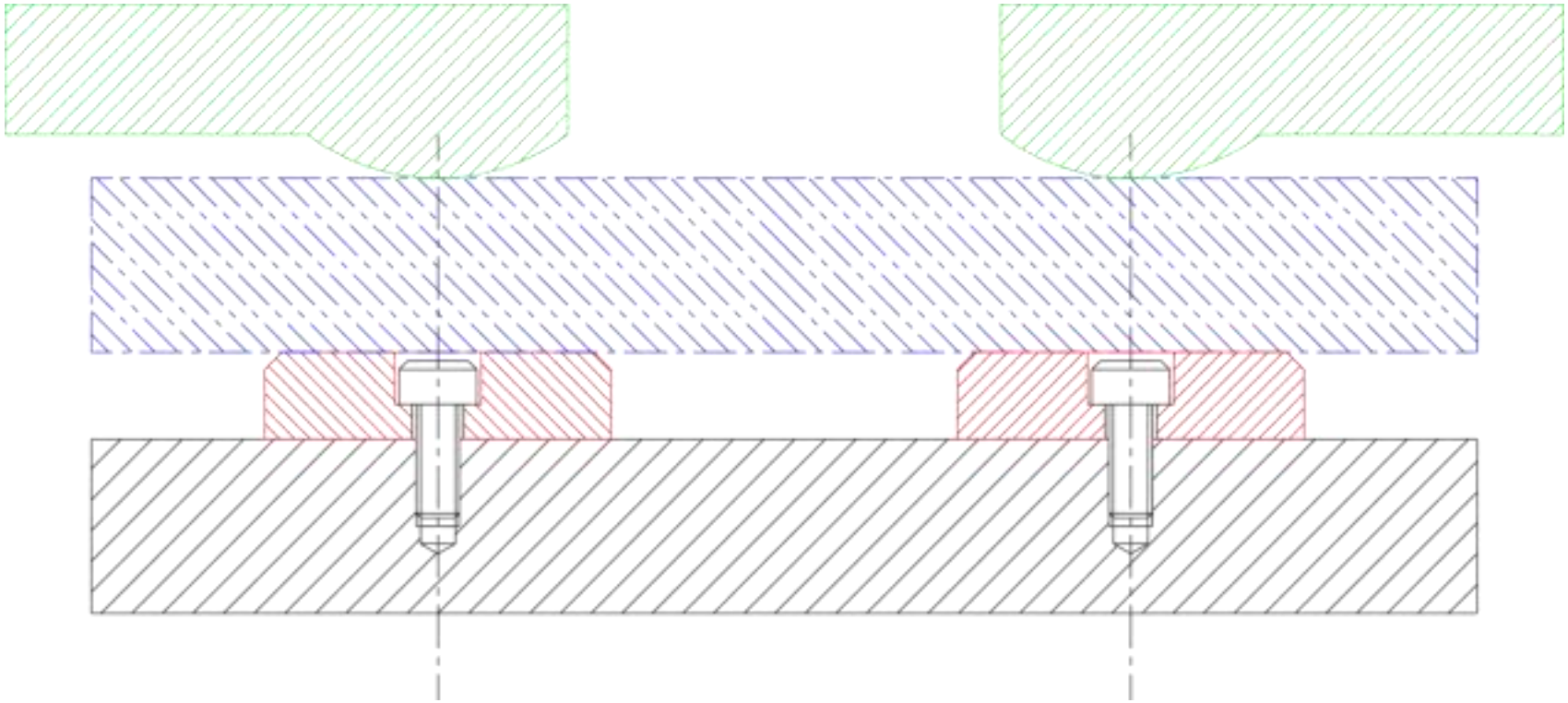

Principles of Clamping

- Clamping force shall be directed towards support / locators.

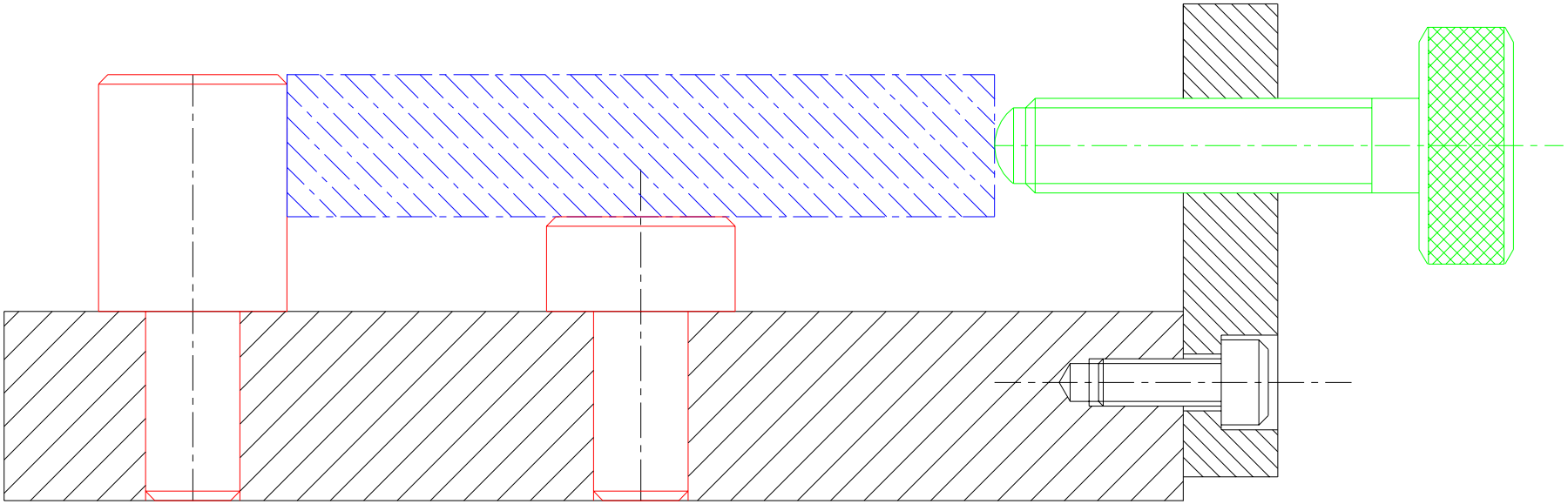

Principles of Clamping

- Clamps shall apply force against supported area of work piece

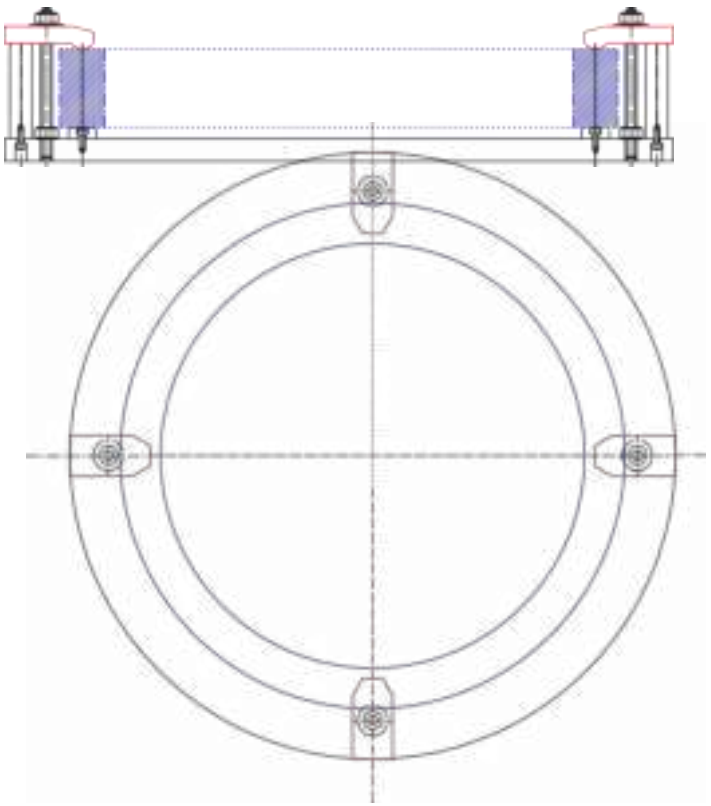

GOOD

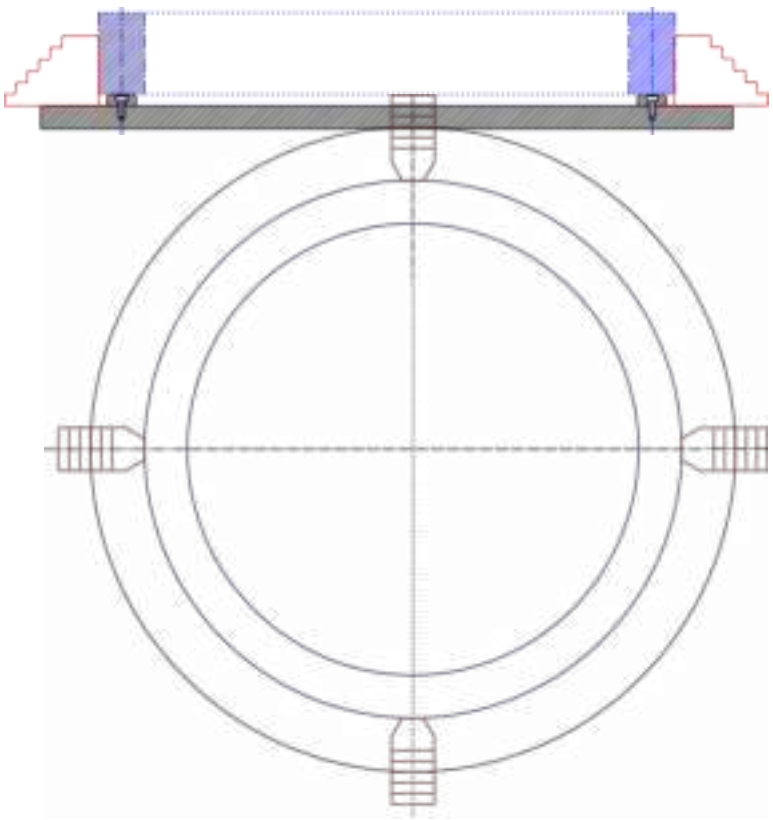

BAD

Methods of Clamping

Clamping method and system are basically of two categories:

1. **General type without much consideration of the speed of clampingoperations.**
2. **Quick acting clamping method / quick action clamps.**

Strap / Plate / Bridge Clamps

- It is very **simple and reliable** clamping device.
- The clamping force is applied by spring loaded nut.

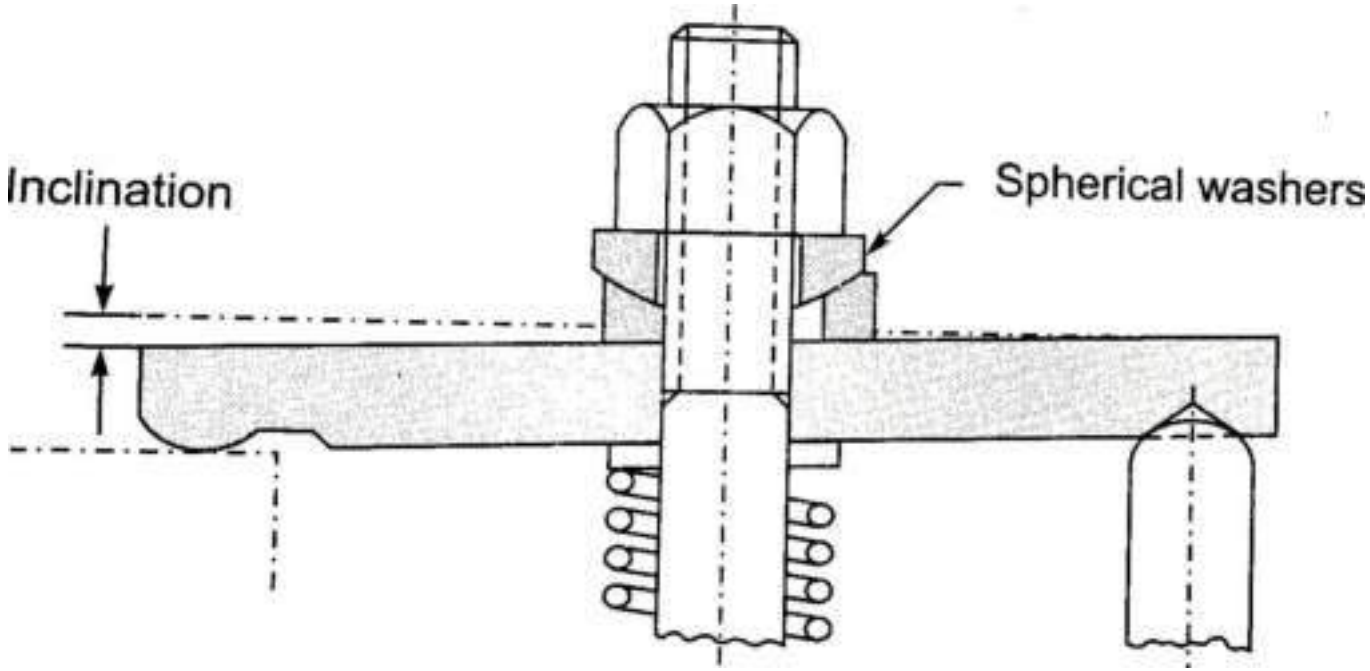

Strap/ Plate / Bridge Clamps

- These are made of **rectangular plates** and act like levers.
- The clamps are tightened by rotating **a hexagonal nut** on **a clamping screw.**
- One end of the clamp presses against **the workpiece** and the other end on **the heel pin.**
- **The toe** i.e. clamping face of the clamp is **curved** and the pressure face of the heel pin is made **spherical** to take care of **any variations in the workpiece.**
- **Spherical washers** permits the clamp **to tilt** with respect to the screw and the nut.

- Strap clamps are provided with **a washer and spring below the clamp.**
- **The spring lifts** the clamp as the **nut is loosened** and workpiece becomes free.
- The Spring holds the clamp **in a raised position** during loading and unloading of the workpiece.
- **Washer** prevents the entry of the spring in the hole of the clamp.
- Clamp is **rotated about the stud** to release the workpiece.

Strap Clamp: Workpiece Variation

- The clamp is prevented from rotating during clamping by providing **pin at the heel-end.**
- The clamp stud is usually **at least 10 mm in diameter** and nearer to the toe-end than heel-end of the clamp.

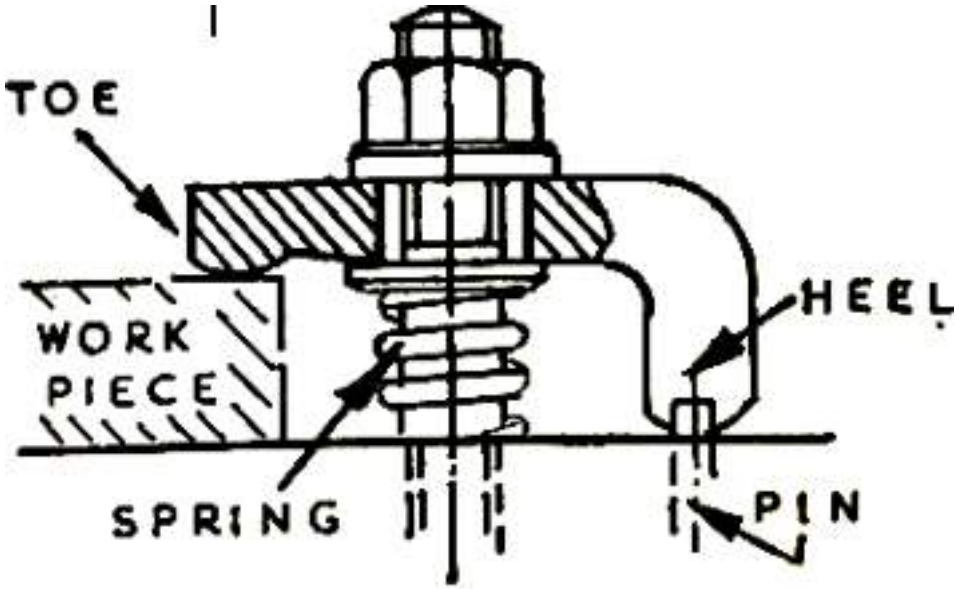

FIG 4.1

SOLID CLAMP

Strap Clamp: Workpiece Variation

- **The heel pin** engages the clamp plate to prevent it from rotating during clamping.

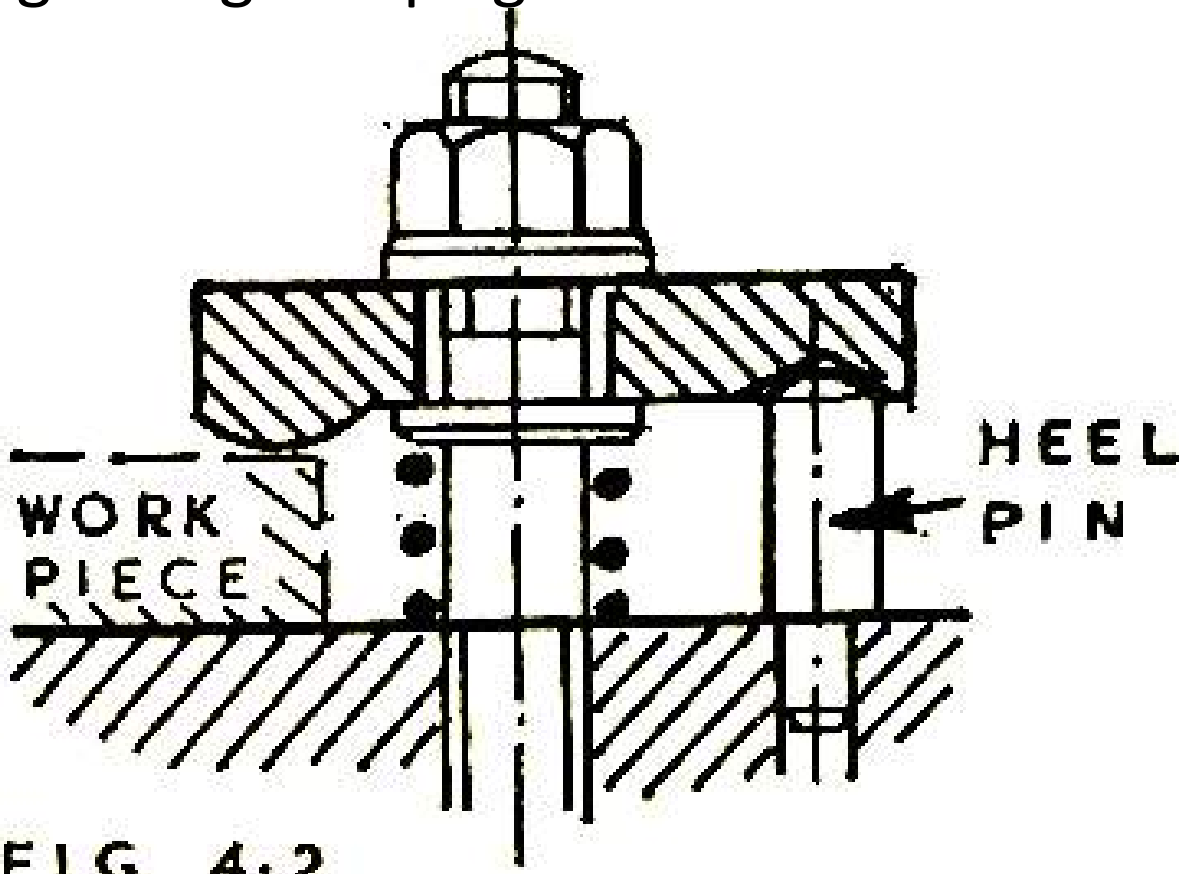

FIG 4.2

CLAMP WITH HEEL PIN

Strap/ Plate / Bridge Clamp

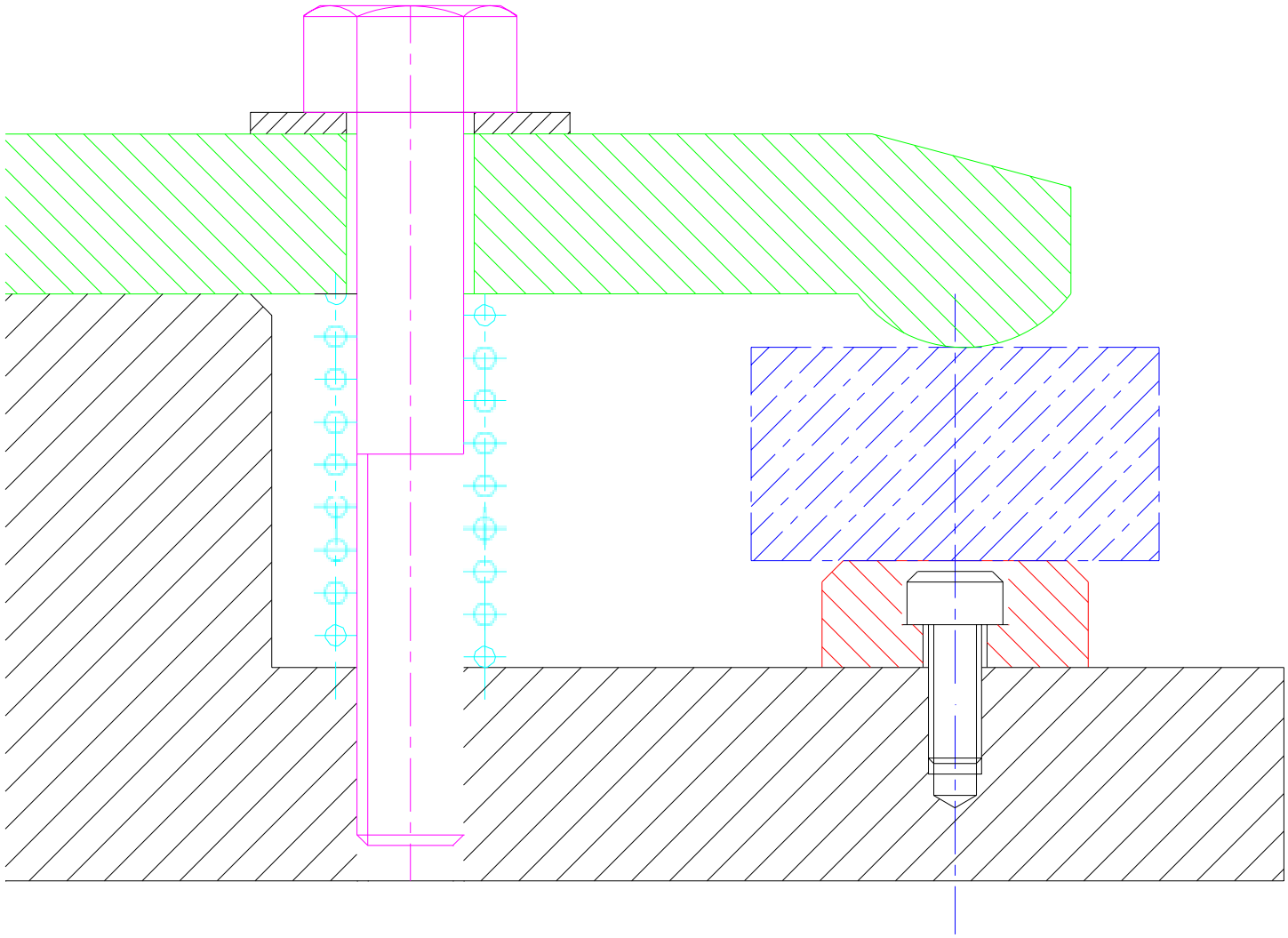

Retractable Strap Clamp

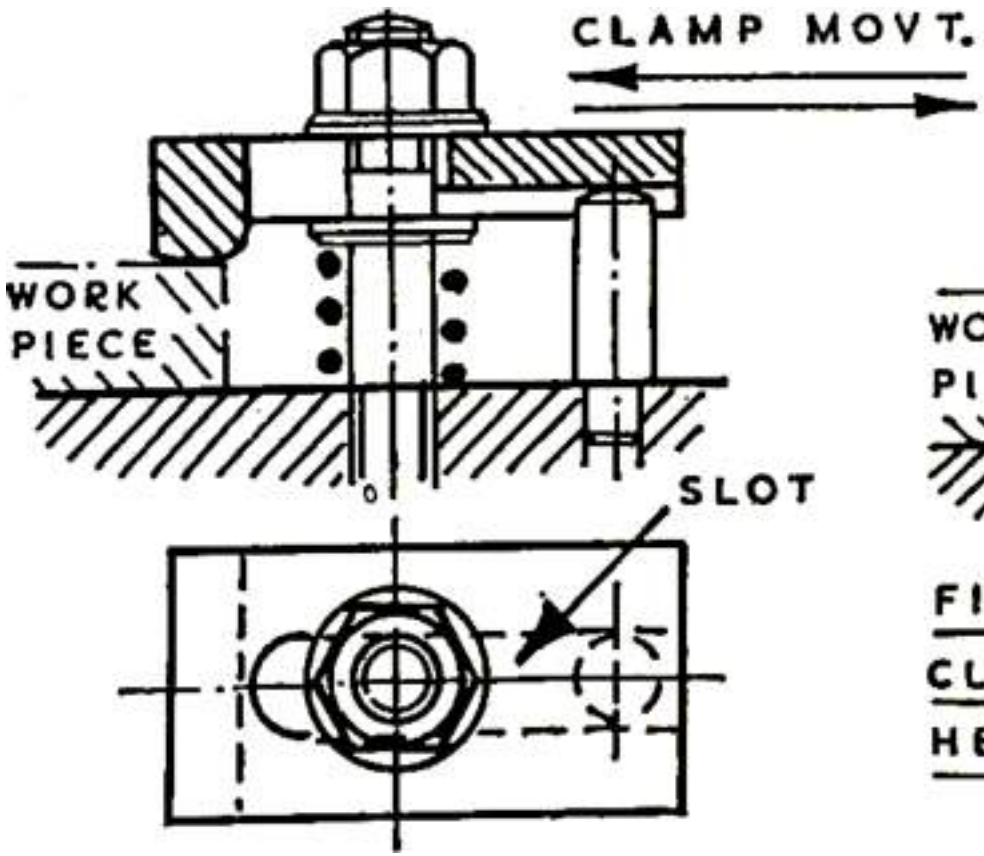

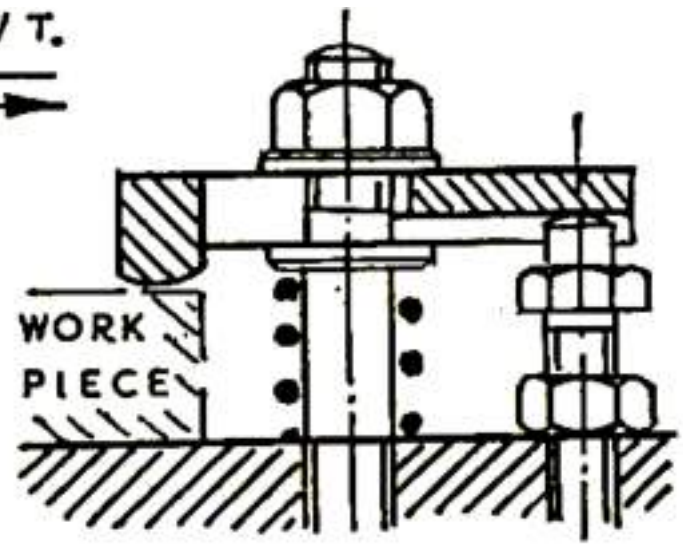

FIG 4.4

CLAMP WITH ADJUSTABLE HEEL PIN

"U" Clamp

- U Clamp can **be removed altogether** to facilitate loading and unloading of the workpiece.

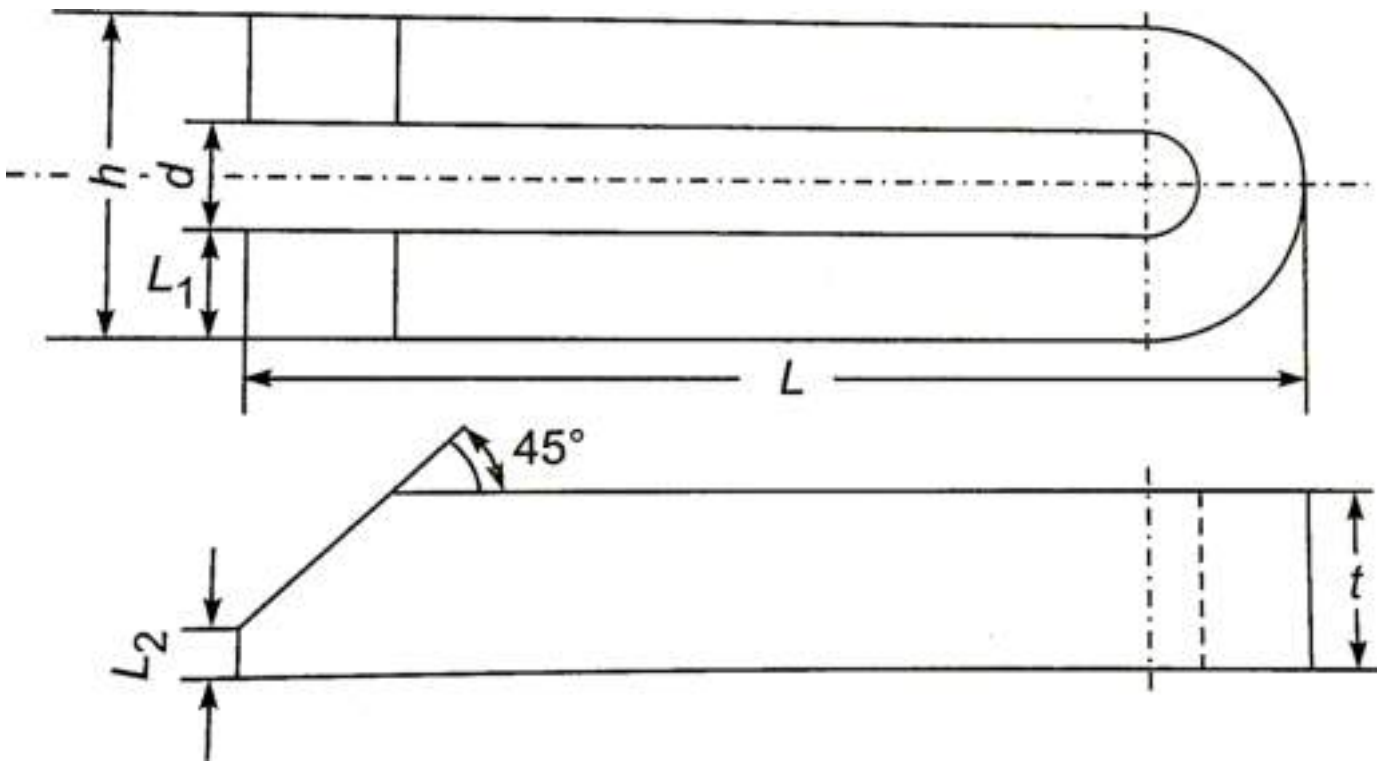

TwoPoint Clamp

- It is used to clamp **two workpieces or to clamp a single workpiece at two locations.**

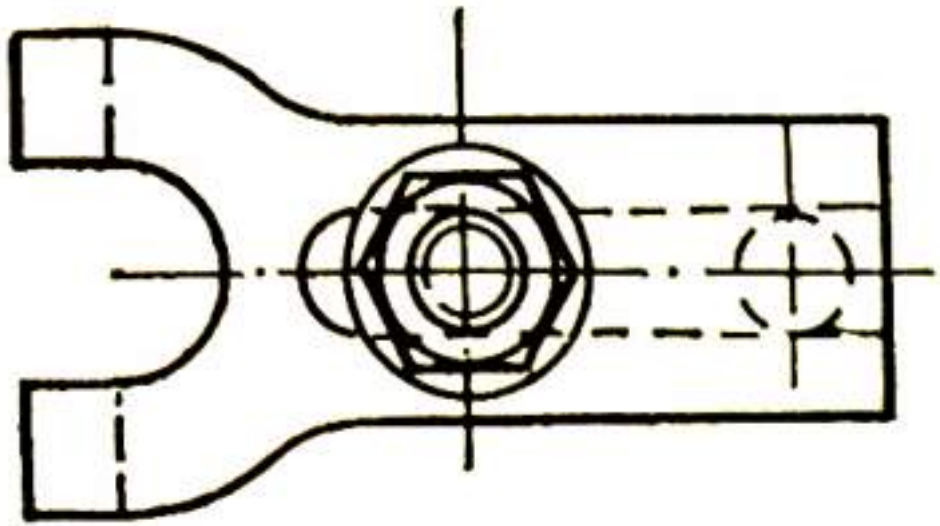

FIG 4.6

TWO POINT CLAMP

Swinging Strap Clamp

- This type of clamp can **be rotated by 90°** to clear the passage for loading and unloading the workpiece.
- The clamp is swung to the position shown by the chain dotted line during loading and unloading of the workpieces.

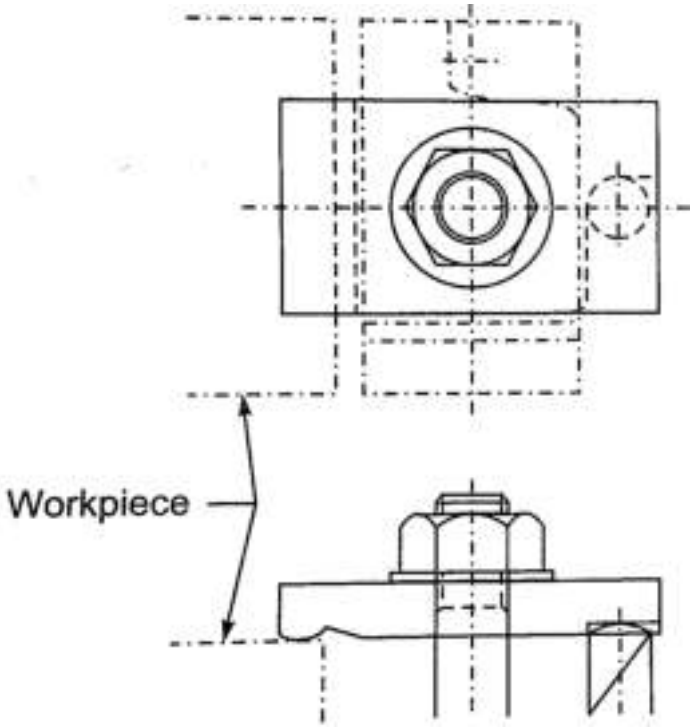

Swinging Strap Clamp

SpecialStrap Clamp

- The clamp shape can be changed **to suit the workpiece and the operation.**

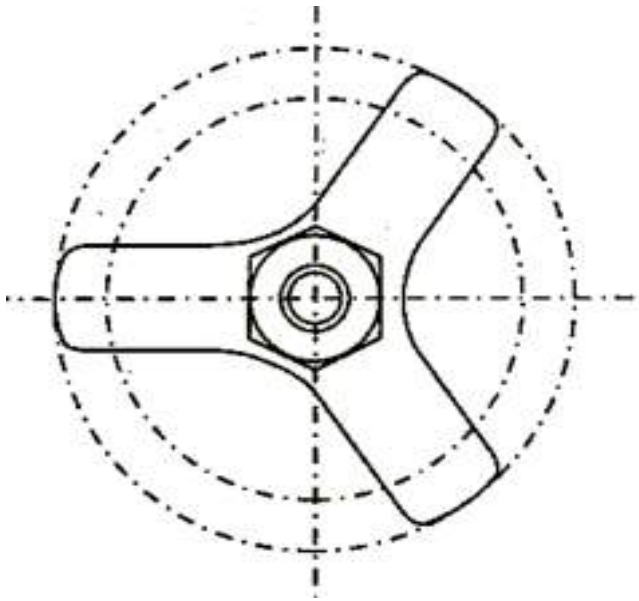

Spider Clamp or Three-point Clamp

- **Circular and symmetrical workpieces** can be clamped well with **a spider clamp**
  having three clamping points, no heel pin is necessary.

Strap Clamp

- **Gooseneck Clamp** can reduce the clamp height with respect to the work piece height.

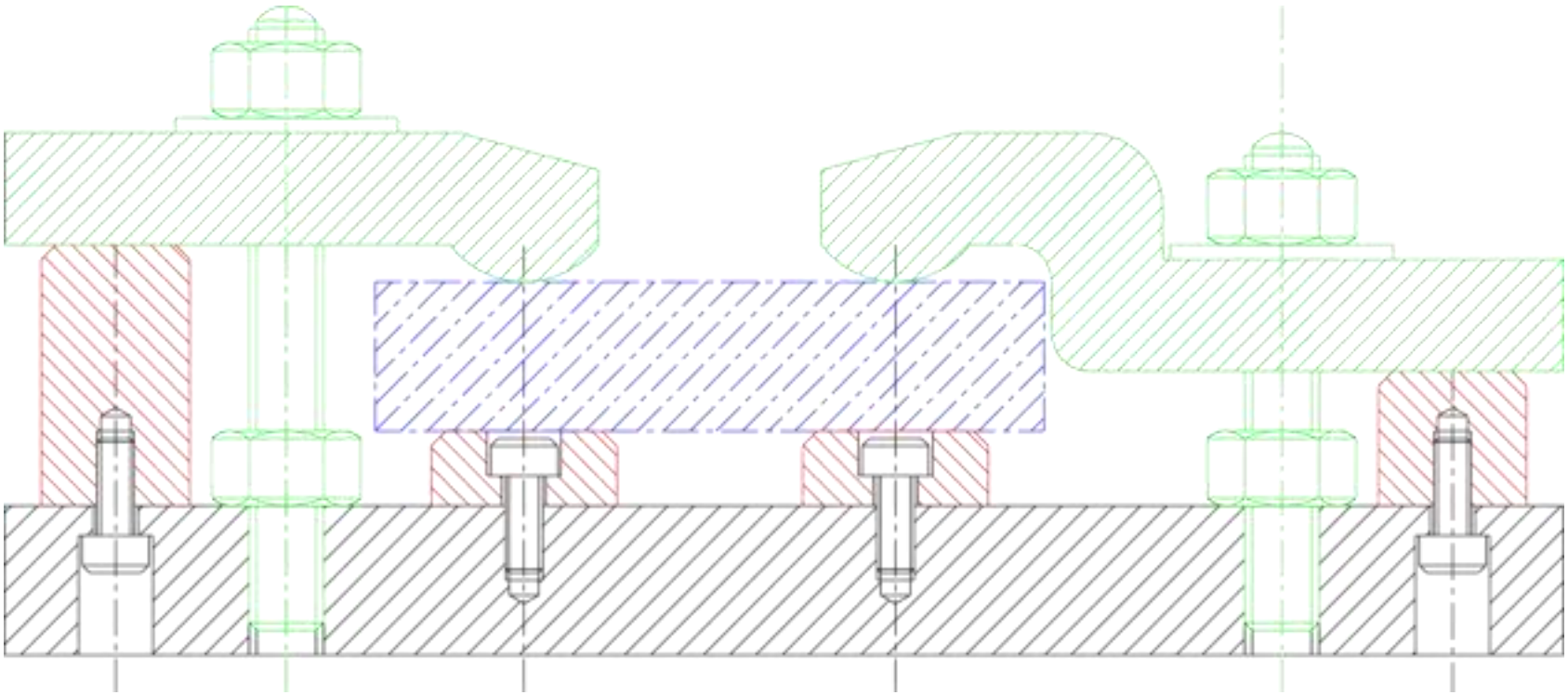

Gooseneck Clamp

Strap Clamp

- Strap Clamp clamping two workpieces

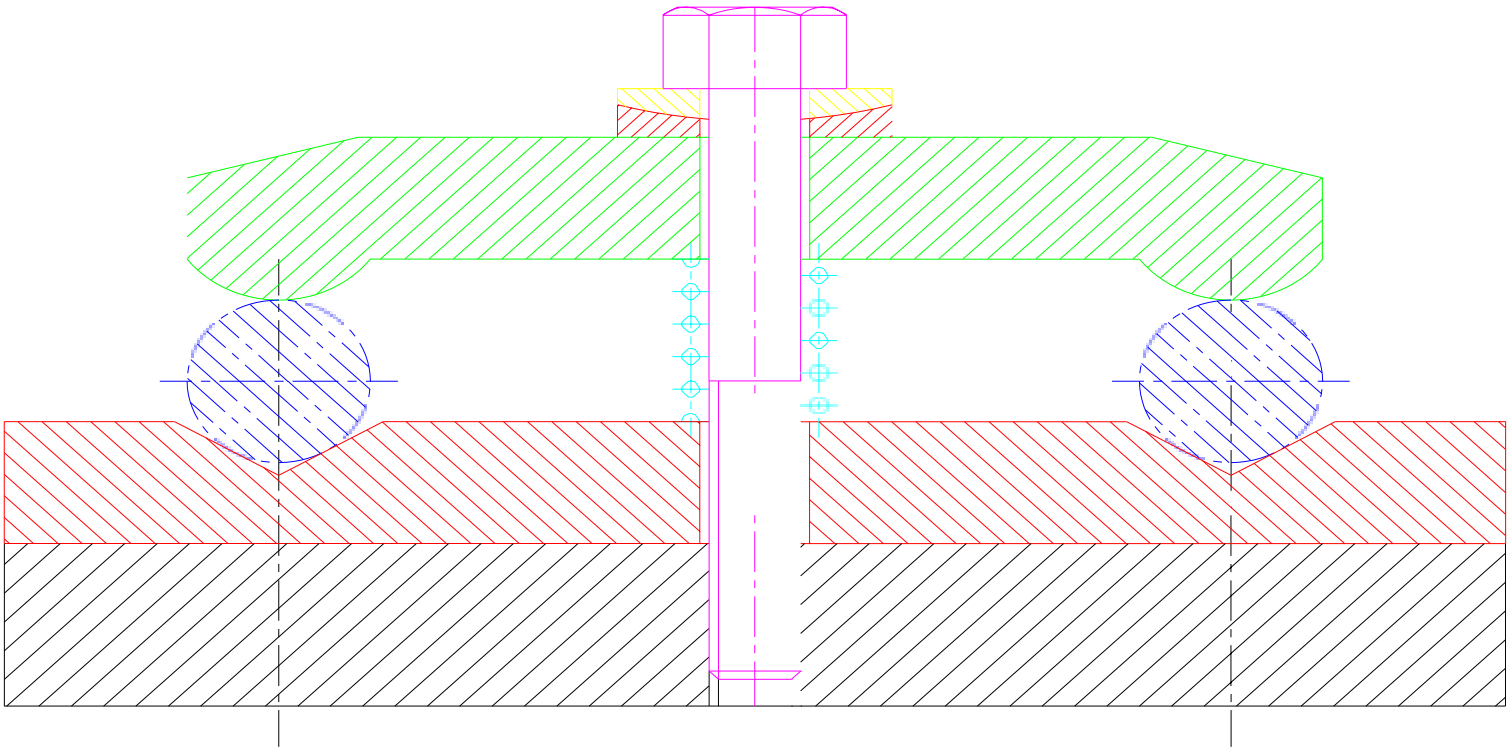

Strap Clamp

Strap Clamp: Workpiece Variation

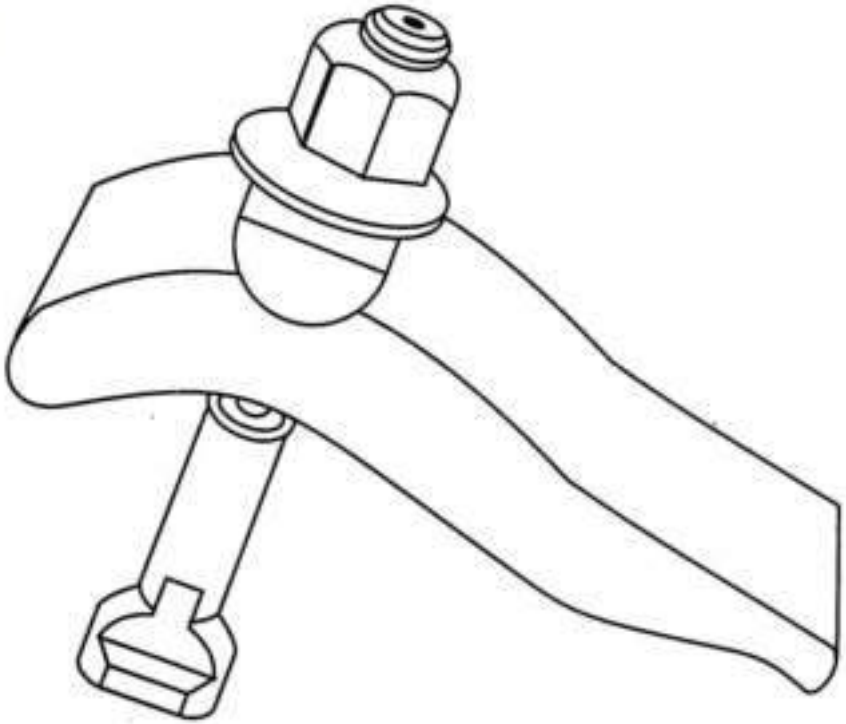

Universal Clamp with cylindrical washer

Edge Strap Clamp

- Edge Clamps are used for clamping workpieces **on the edges** during **facing operations or when only horizontal surface is to be machined.**
- Tightening of **the hexagonal nut** wedges the clamp between the workpiece and the angular heel surface.

Edge Strap Clamp

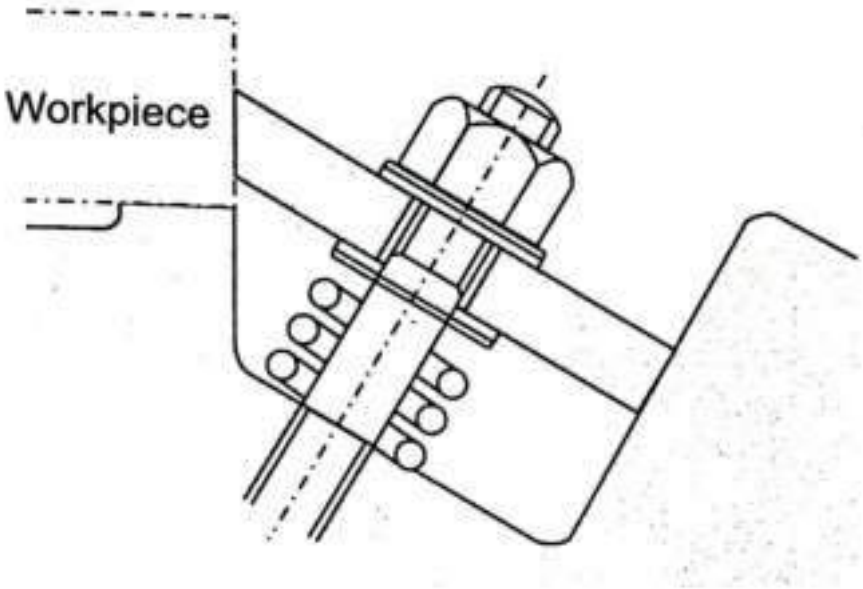

Edge Jaw Clamp

- Edge jaw clamp slides down **the inclined heel** as the hexagonal nut istightened.
- Tightening of the hexagonal nut pushes **the jaw** against the workpiece **to clampitsedge.**

Edge Jaw Clamp

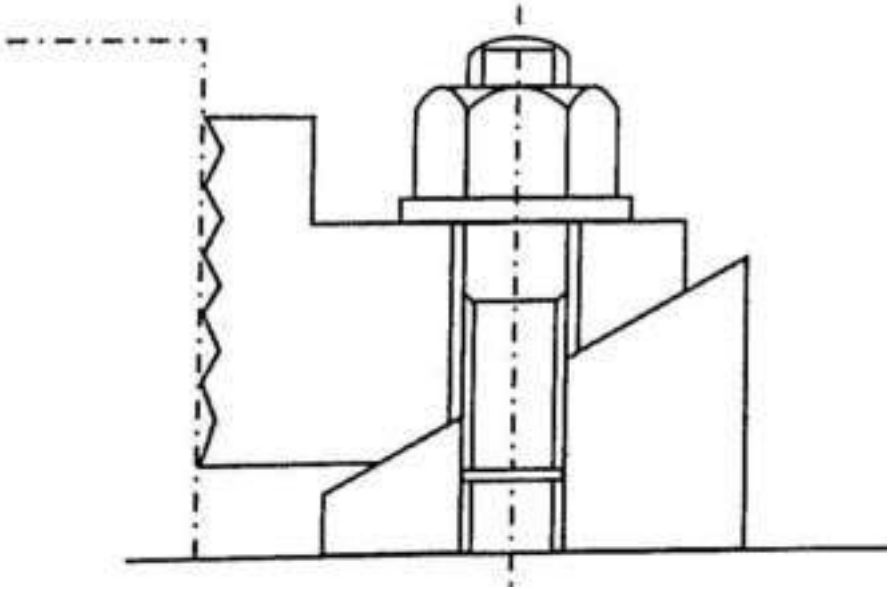

Pivoted Strap Clamp

- Clamps are often **pivoted at the centre** to simplify their operation.
- **Knurled headed screw** is used to loosen and tighten the clamp.

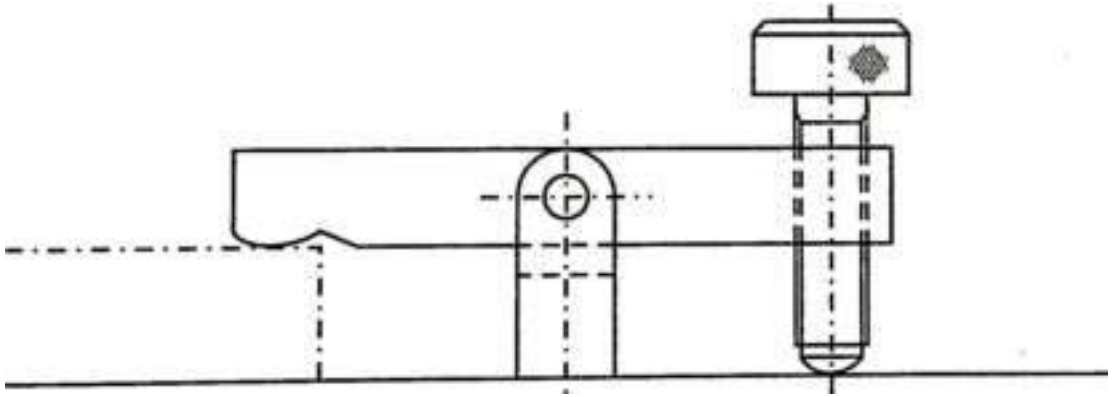

Pivoted Edge Clamp

- **Pivot pin** is nearer to the clampingpoint.
- Screw is shifted to the end opposite theclamping point.
- Clamping screw becomes more accessible to the operator.

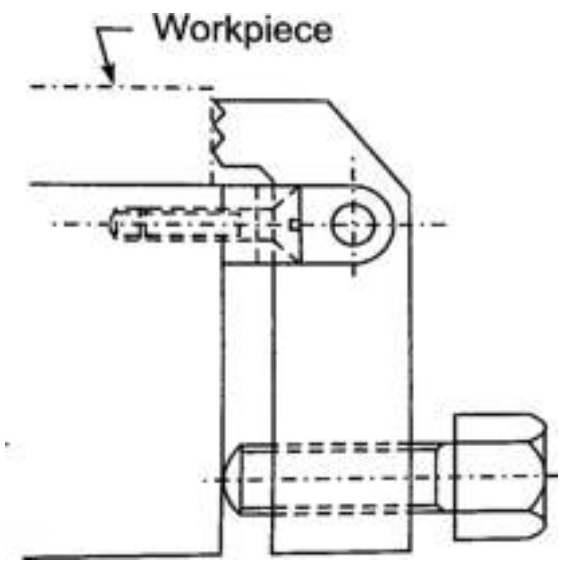

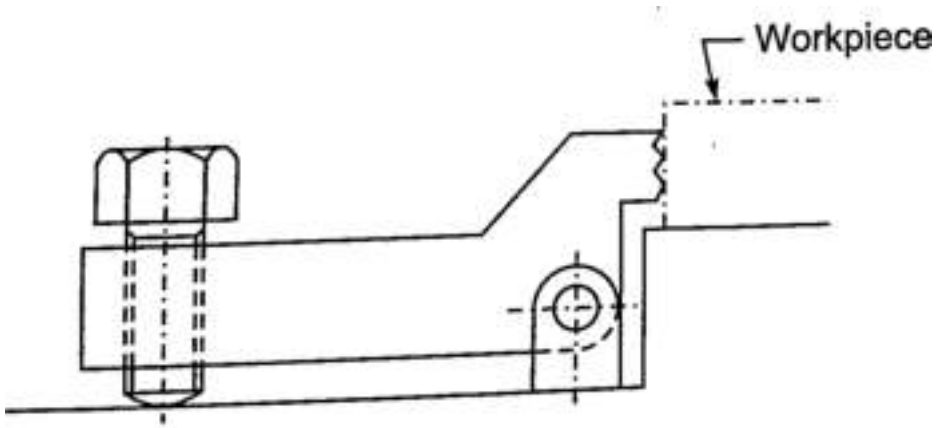

Pivoted Two-wayClamp

- Pivot action can be used for two-way clamping of the workpiece.
- **Tightening of the screw** makes the curved surface of the clamp touch the workpiece and further tightening of the screw clamps the workpiece **vertically and horizontally.**
- Two-way clamp also pushes the workpiece **against two locators.**

Pivoted Two-way Clamp

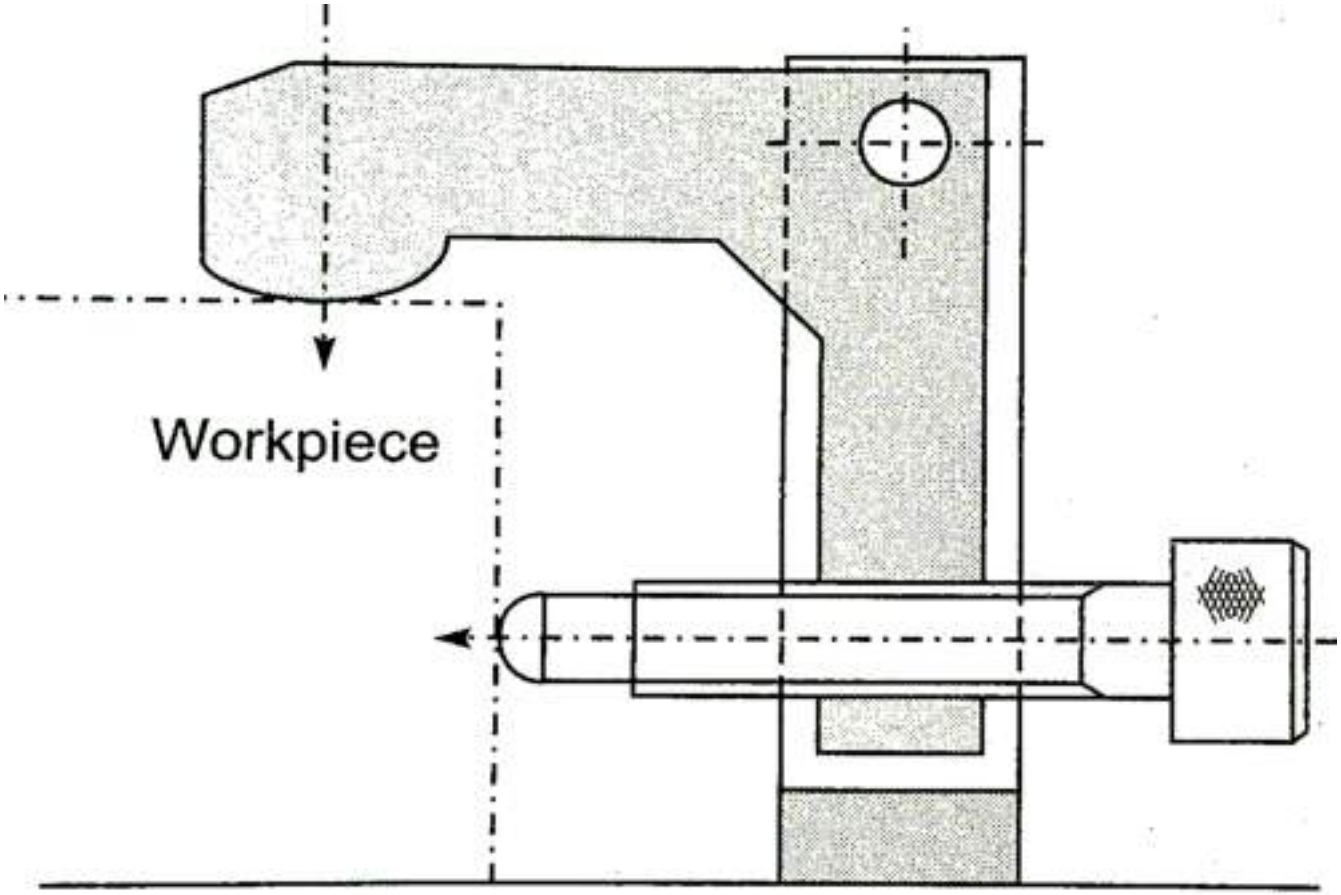

Hinged Clamp

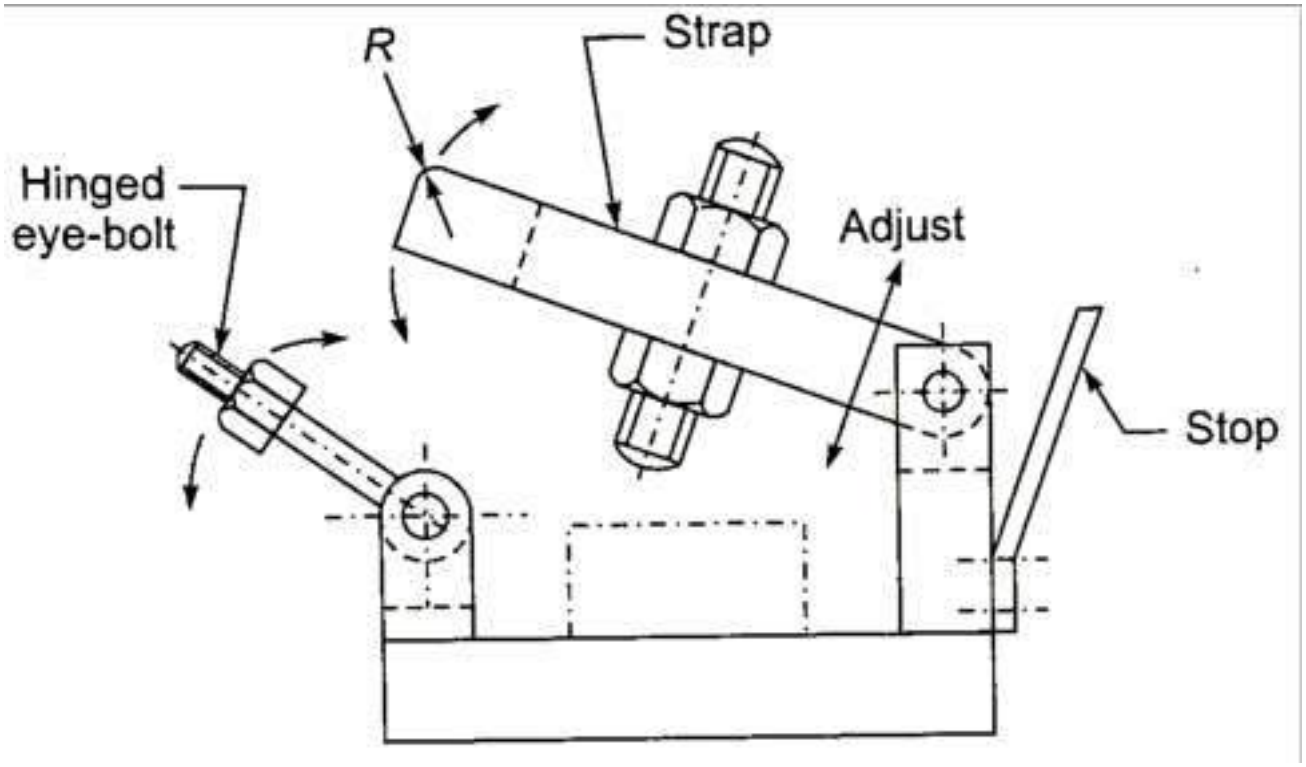

Hinged Clamp

- Hinged clamp provides **rapid clearance of the passage** for loading and unloading.
- It is clamped with **swinging eyebolt.** The clamp has **open slot** through which the eyebolt can be swung into position.
- Tightening of **the hexagonal nut** clamps the workpiece.
- For loading and unloading the workpiece, the hexagonal nut is loosened **half-a-turn** and the eyebolt is swung out of the open slot to free the hinged plate.

Hinged Two-way Clamp

- Workpiece is pushed against the location pins by **the pivoted edge clamp** which also houses **the swinging eyebolt.**
- **Knurled nut** is used to clamp the workpiece against the locationpins.
- Workpiece is clamped in two direction by **the edge clamp and the pad** in the hinge.
- For loading and unloading the workpiece, the knurled nut is loosened half-a-turn and **the eyebolt** is swung out of the open slot to free **the hinged plate.**

Hinged Two-way Clamp

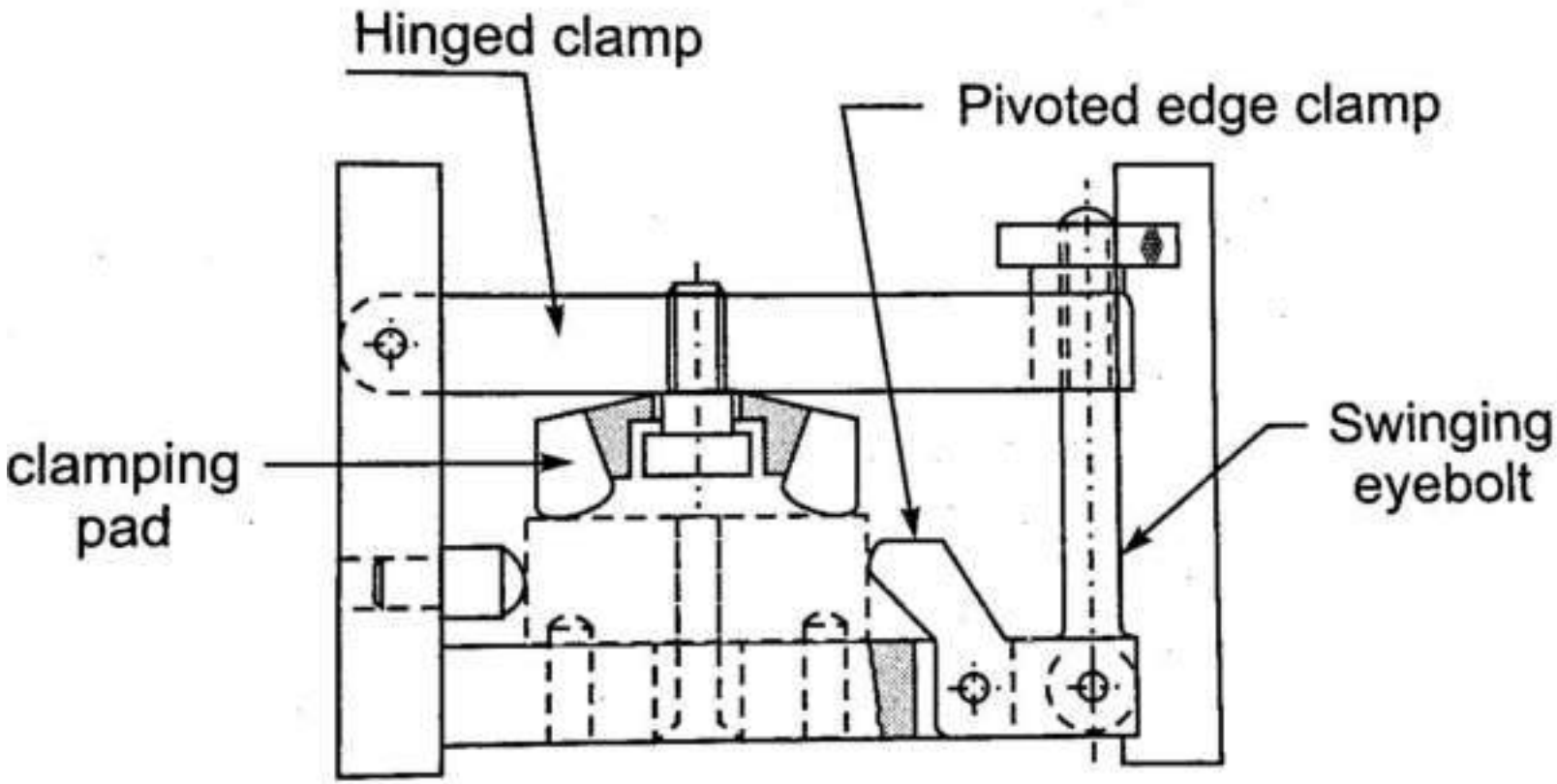

CWasher

- **Strap clamp** with an open slot.
- **Simple and quick** in operation.
- **Slot** permits quick removal of C Washer after a slight loosening of the hexagonal nut.
- C washer is often **chained to the fixture or pivoted** around a shoulder screw to prevent its loss.
- Pivot shoulder screw makes the Cwasher captive.

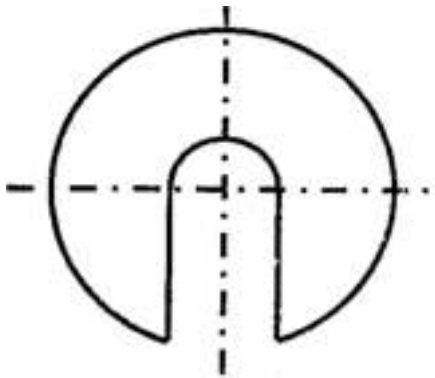

C Washer

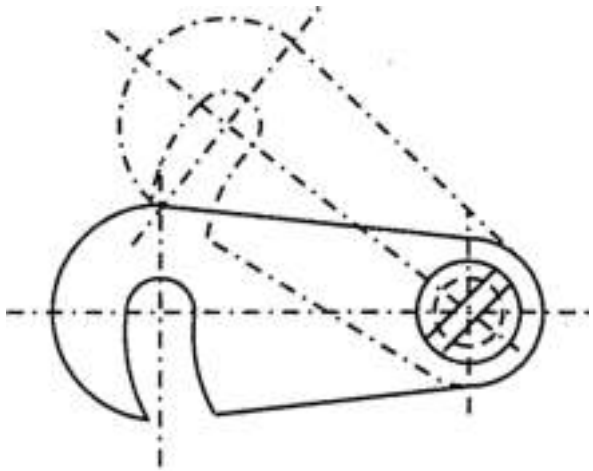

Captive *C* washer

Swinging Clamps

- Theses clamps are swung to the position
- They rotate in the plane of the plate.
- Figure depict the swinging clamp pivoted about the shoulder screw.
- Workpiece is clamped by knurled head screw.

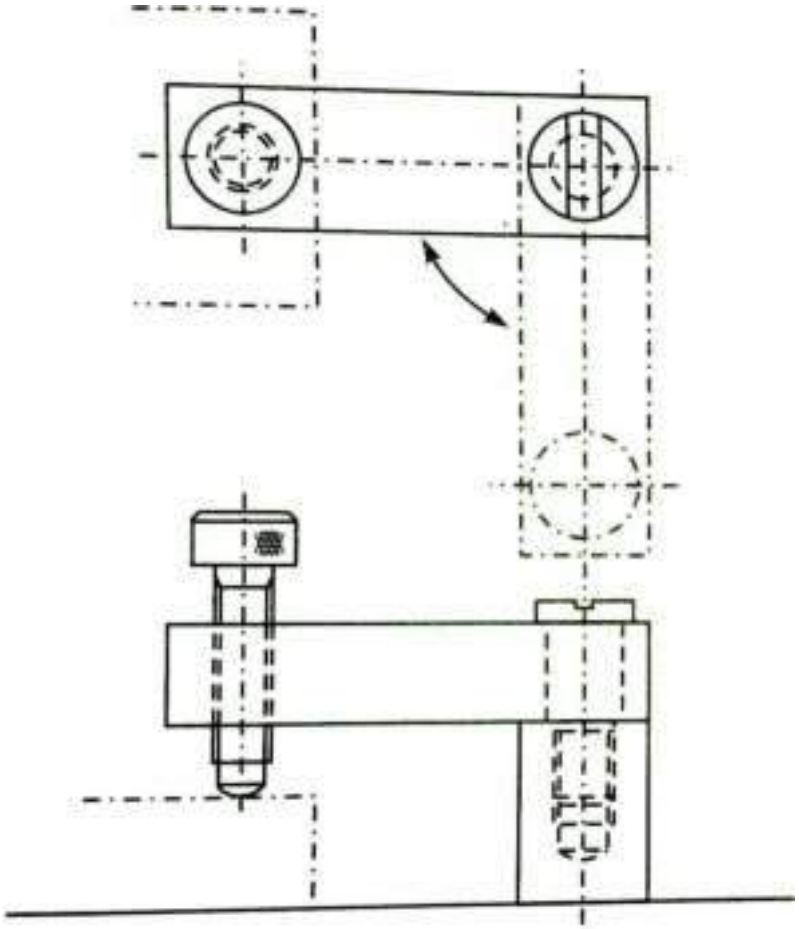

Fig. 3.19

Swinging strap clamp

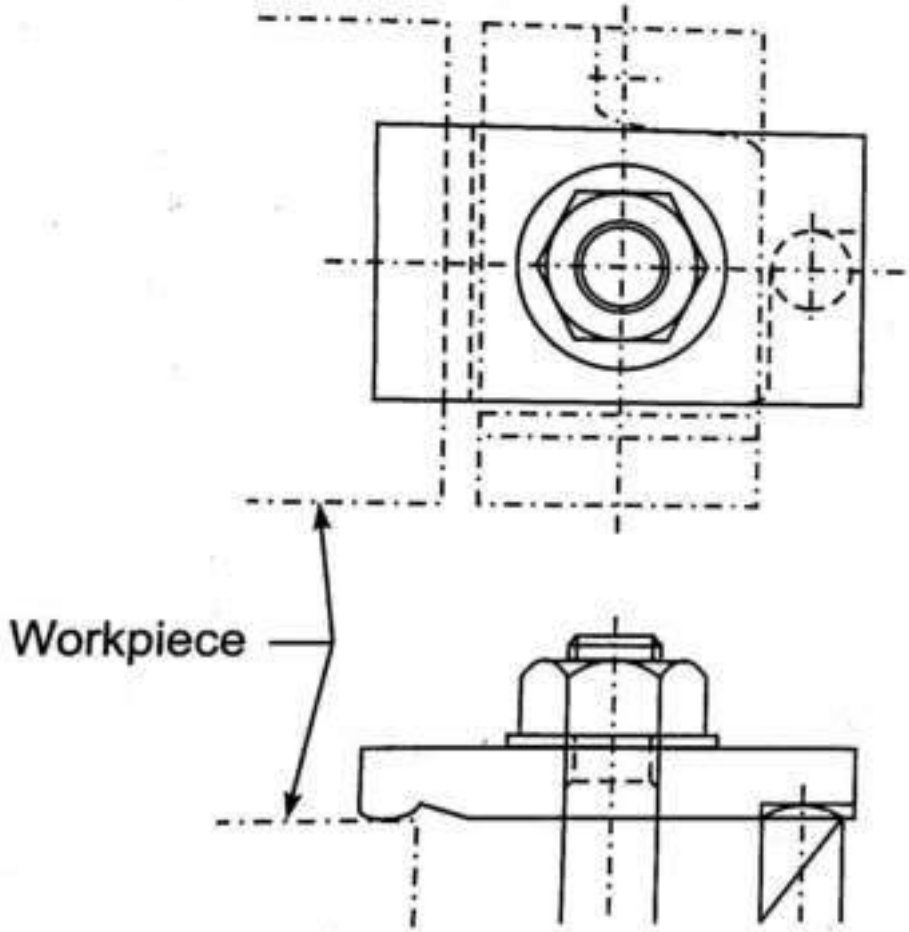

Fig. 3.10a

Swinging strap clamp

Swinging Clamps

- Swinging latch with an open slot at one end. The latch is swung around pivot Pat the other end.
- Shoulder screw Sinters the open slot during operation. The workpiece is clamped by knurled head screw.

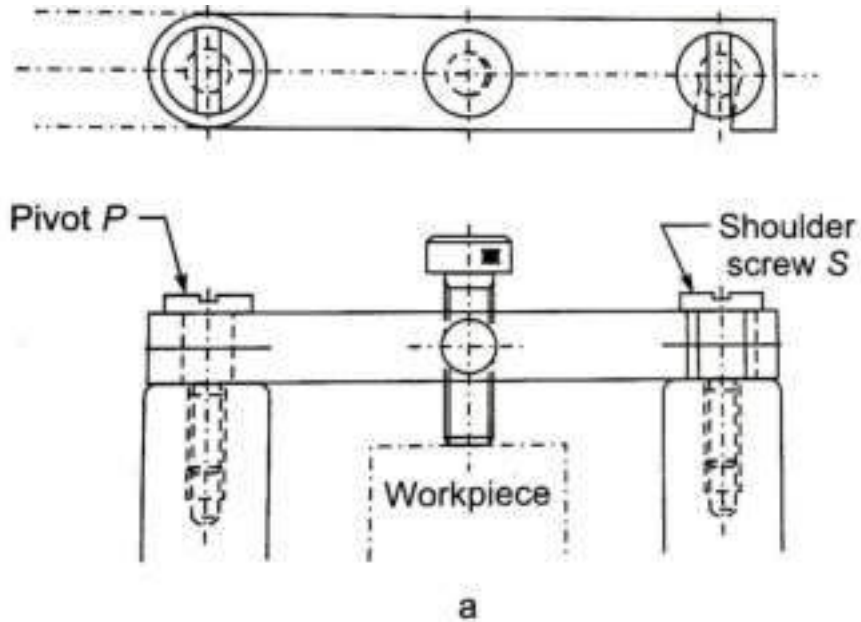

Fig. 3.21a

Swinging latch

Swinging Clamps

- **Types of latches** and their methods of operation.
- Chain-dotted line shows the latches in their clear loading and unloading position.
- **Shoulder screws** are often used as pivots for thrustpads.
- The shoulder diameter must be bigger than the thrust diameter so that the shoulder face acts as a stop when the screw is tightened.

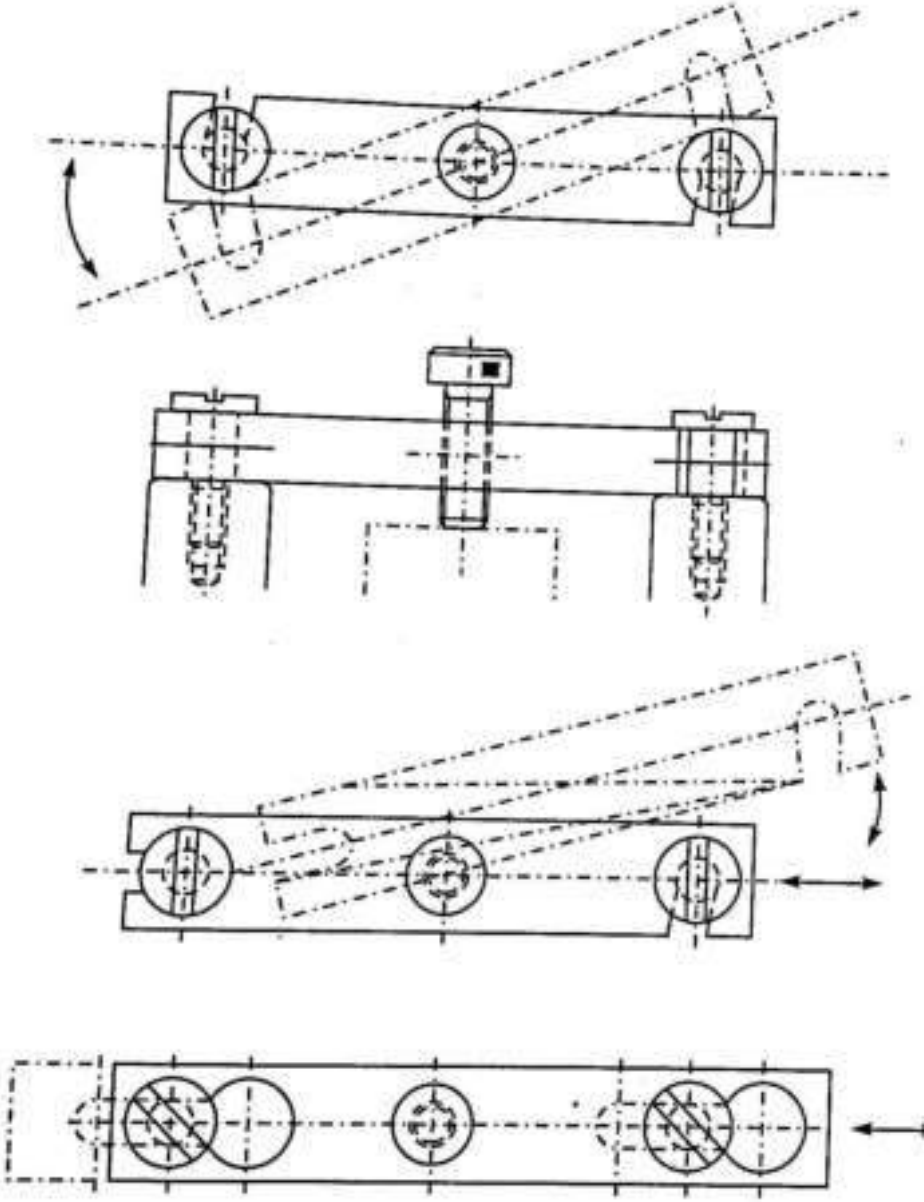

SwingingClamps

- Swinging clamp with CWasher

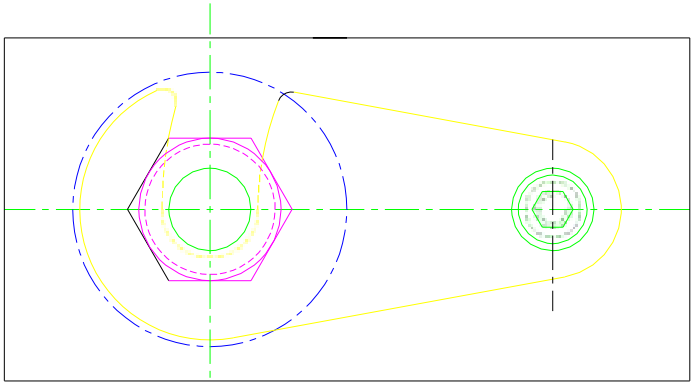

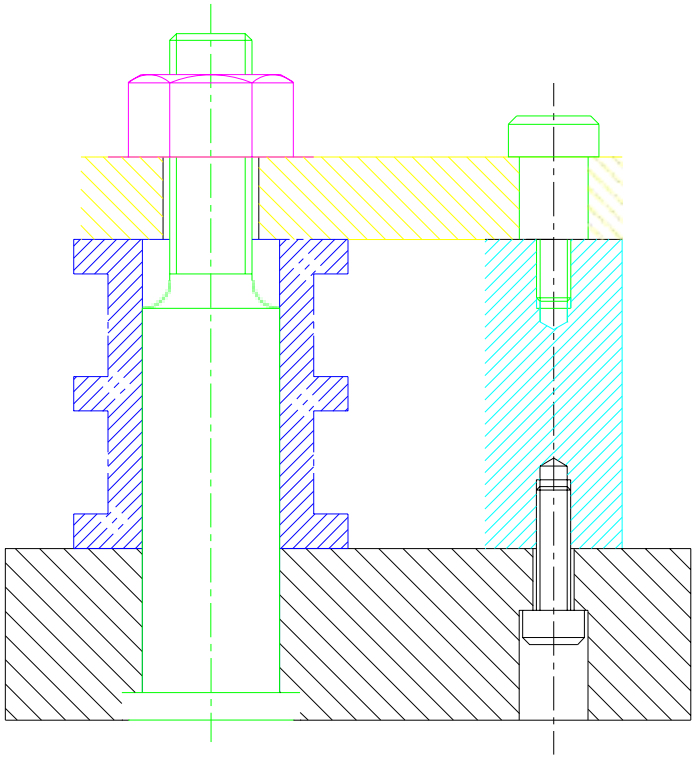

Toggle Clamp

- They provide considerable **distancefor loading and u**
- **The Cframe clamp** can be swung to the chain dotted position during loading and unloading.

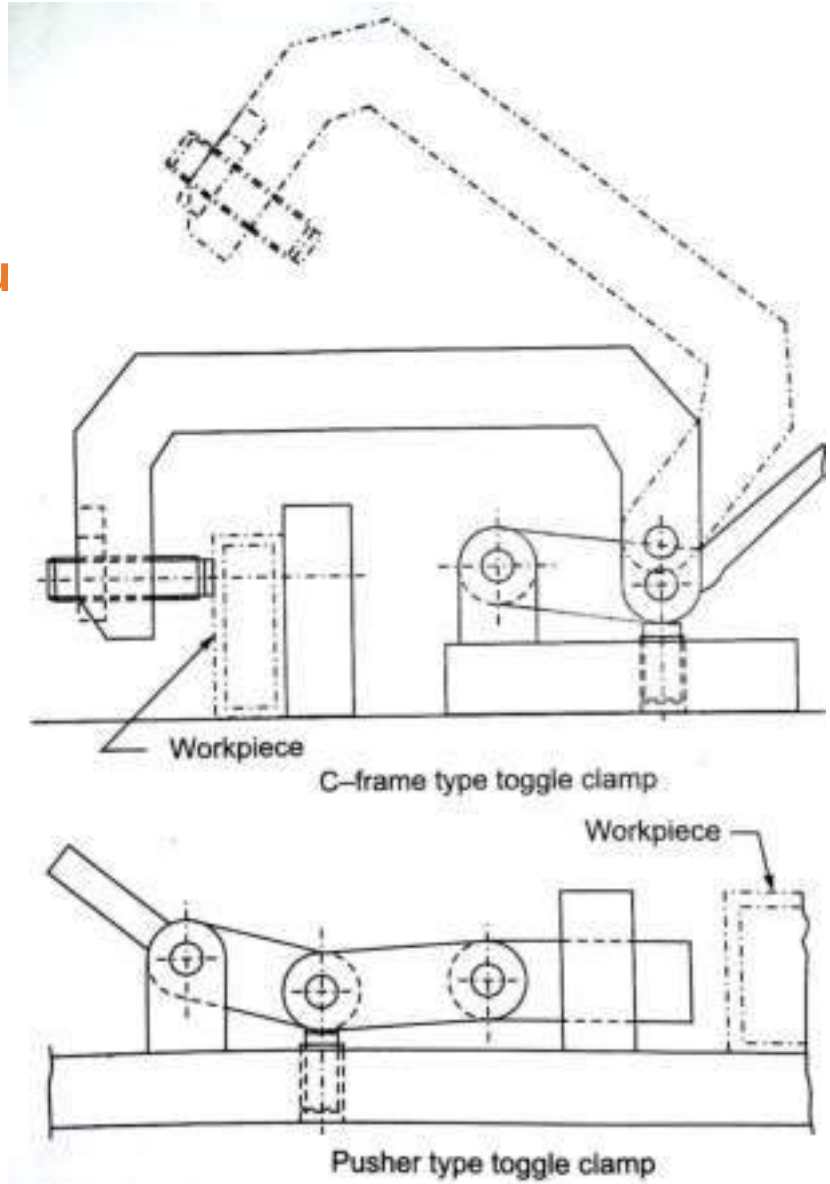

Fig. 3.29.
Toggle clamps

Toggle Clamp

- The pusher-type toggle clamp **withdraws backwards** during unclamping.
- Toggle clamps are provided with clamping screws to accommodate workpiece variations.

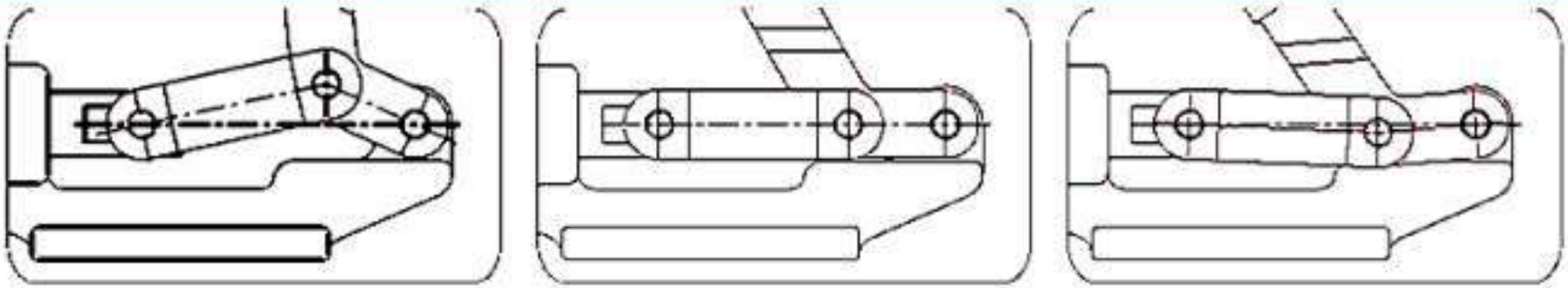

Unclamped Position | Centre Position | Over-centre, Clamped Position

Toggle Clamp

QuickTurnScrew/ ThumbScrew

- It is used to clamp **hinged jig plates and latches within a quarter turn.**
- **In unclamped position** head of the thumb screw can pass through the slot provided in the jig/latch plate.
- The plate can swung clear of the thumb screw head.
- **For clamping,** the thumb screw is **turned 90°** so its head is right angles to the slot in the plate.
- The mating surface of the thumb screw head must be **filed for proper clamping.**
- Quarter-turn screws are suitable for **light loads** only.
- For heavy loads, **swinging eyebolt and knob** combination is used.

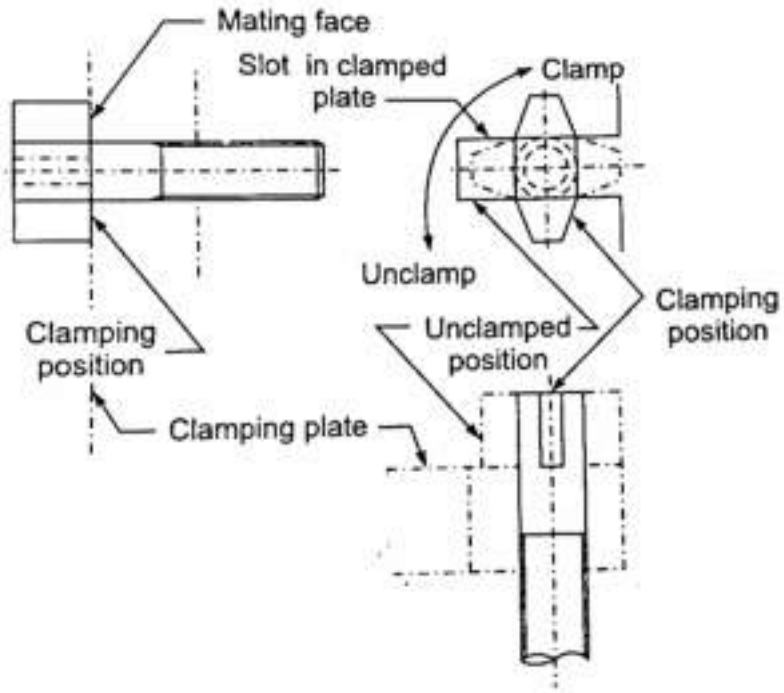

Fig. 3.30
Quarter-turn screw

Quick Action Hand Nut

- They are available with the manufacturers ofs tandard parts.
- Casthand nuts are more convenient and less expensive than the turnednuts

CastHand Nut

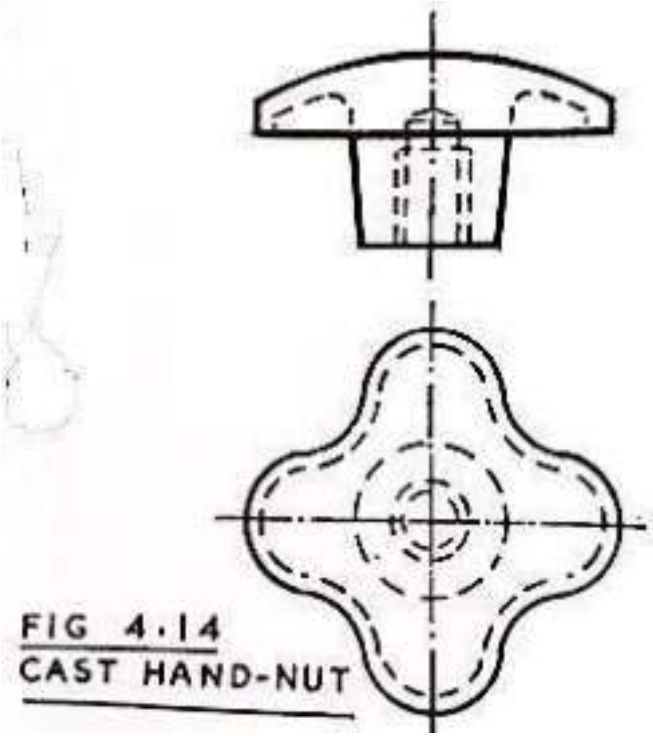

FIG 4.14
CAST HAND-NUT

Cam

- Quick clamping by cam is very effective and very simple in operation.
- The cam type clamping system is used for clamping through some interior parts
  where other simple system will not haveaccess.

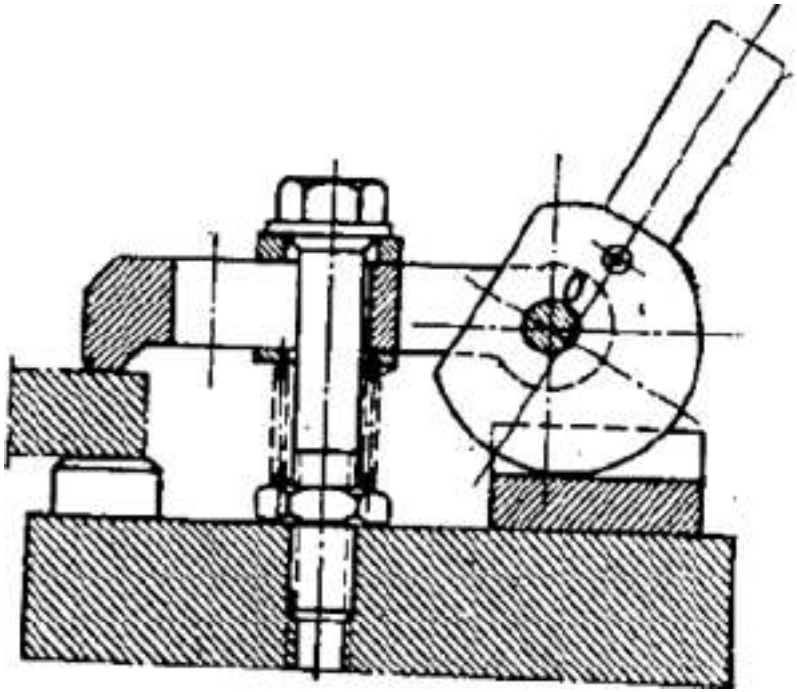

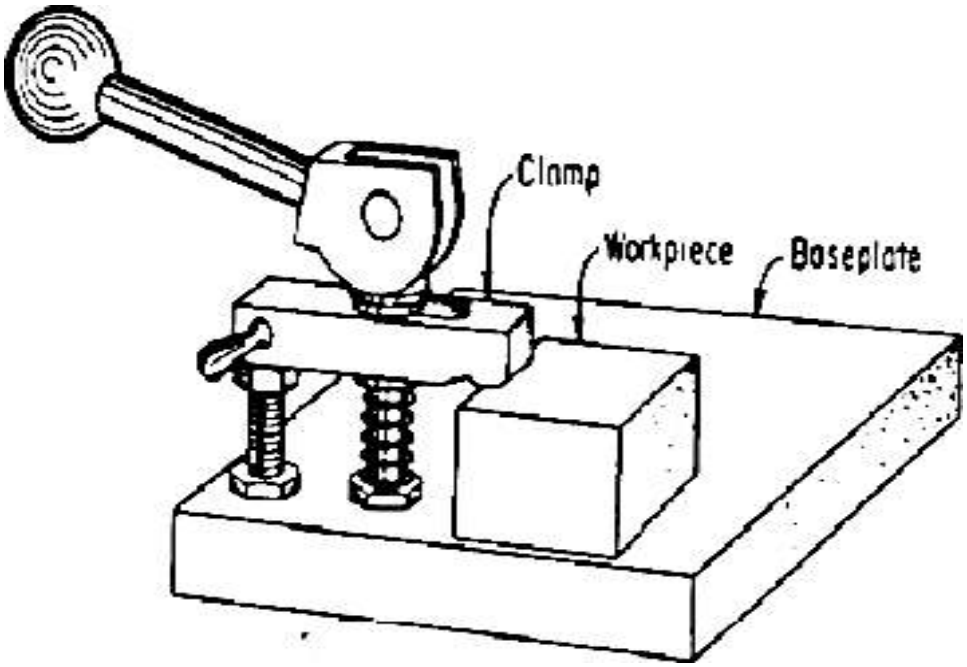

Cam

- Cam shifts its mating surfaces to clamp orunclamp the workpieces.

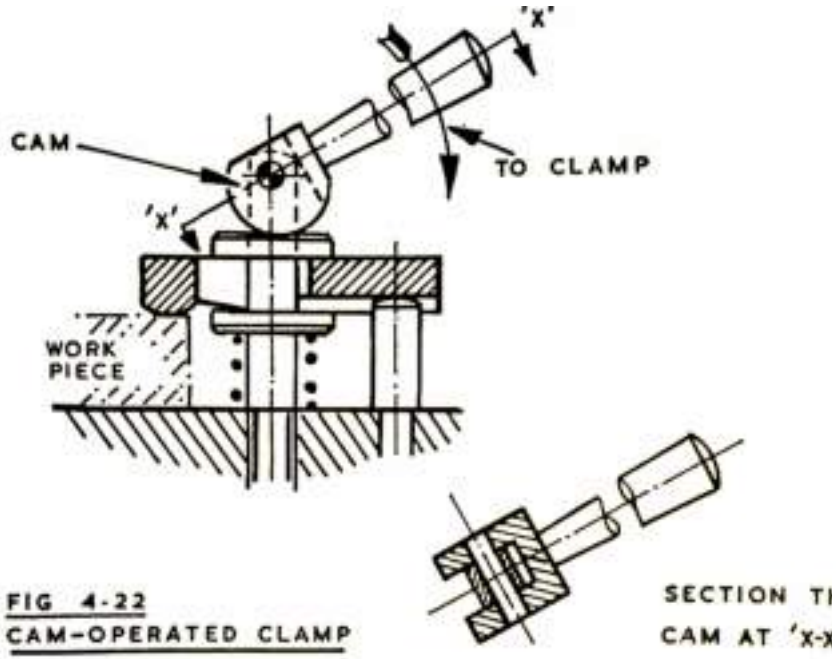

FIG 4·22
CAM-OPERATED CLAMP

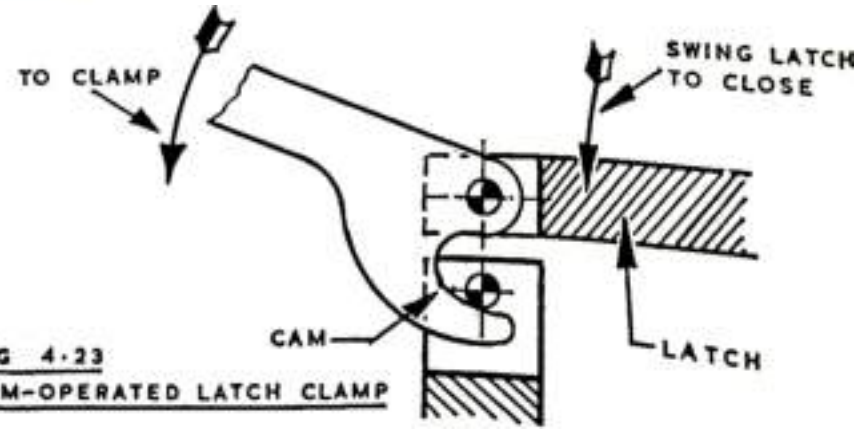

FIG 4·23
CAM-OPERATED LATCH CLAMP

Double Clamping

- Two workpieces **with limited variation** can be clamped by a single strap clamp.
- **The spherical washers** are provided between the nut and the clamp which allow the clamp **to tilt slightly to suit the variation in the two workpieces.**

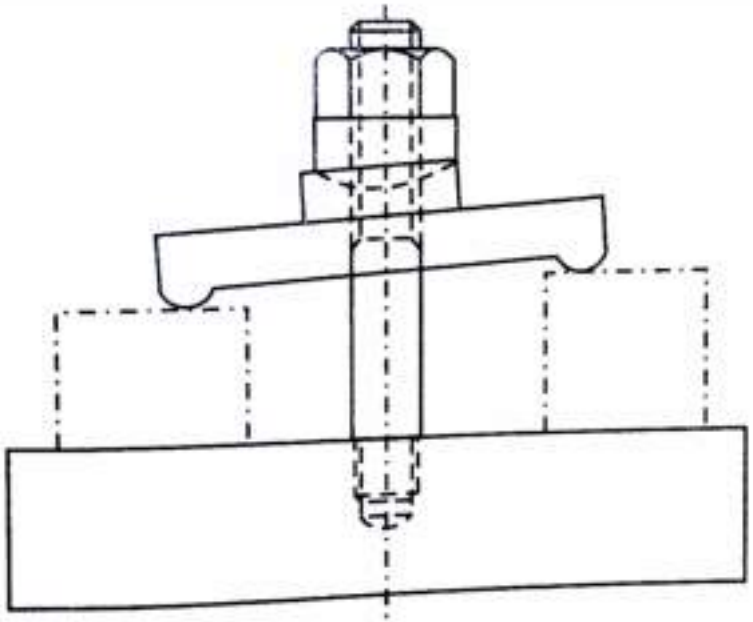

Fig. 3.31

Double clamping

Screw operated strap clamps

The clamping end of the strap is pressed against a spring which

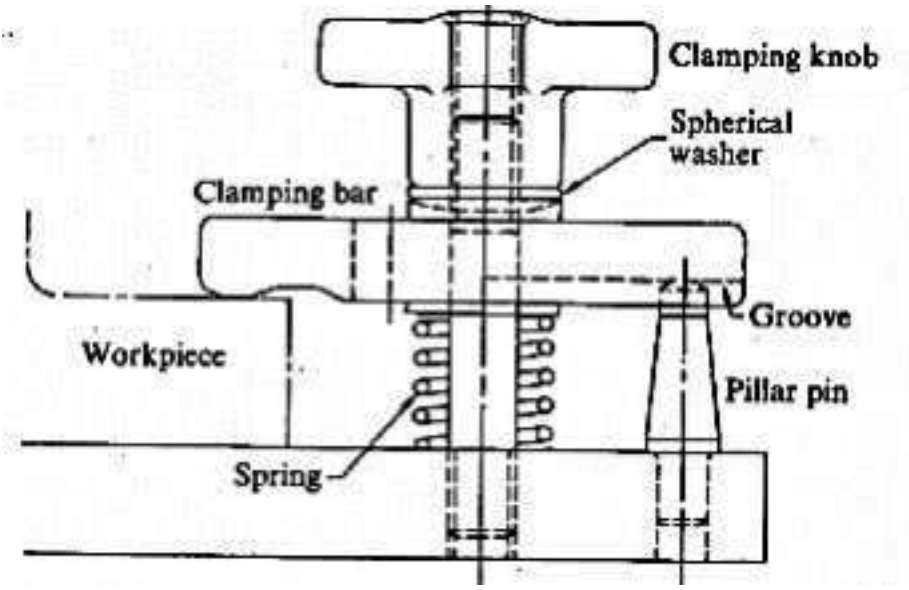

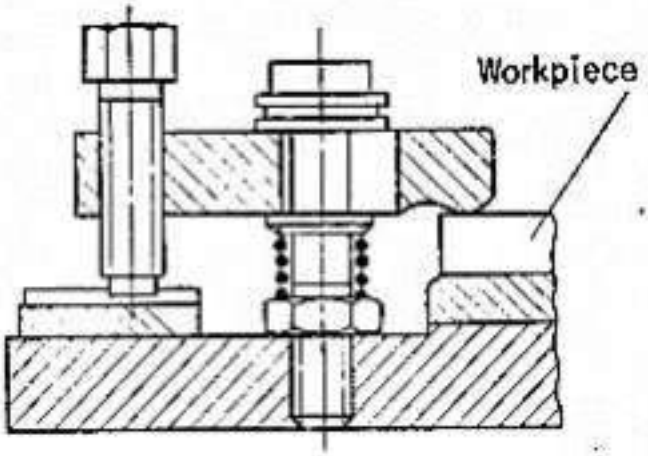

Drill Jig Bushing

- ✓ Drilling jigs are used to machine holes in mechanical products. To obtain positional accuracy of the holes, hardened drill bushes or, jog bushes are used to locate and guide drills, reamers etc. in relation to the workpiece. The portion of the jig into which the hardened bushes are fitted is called bush plate.
- ✓ Drilling jigs are either clamped to the workpiece in which holes are to be drilled or, the workpiece is housed and clamped in the jig body. If more than one hole is to be drilled, the drill jig is made to slide on the table of the drilling machine.
- ✓ Drilling jigs make feasible the drilling of holes at higher speed, with greater accuracy and with less skilled workers than is possible when the holes are laid out and drilled by hand.

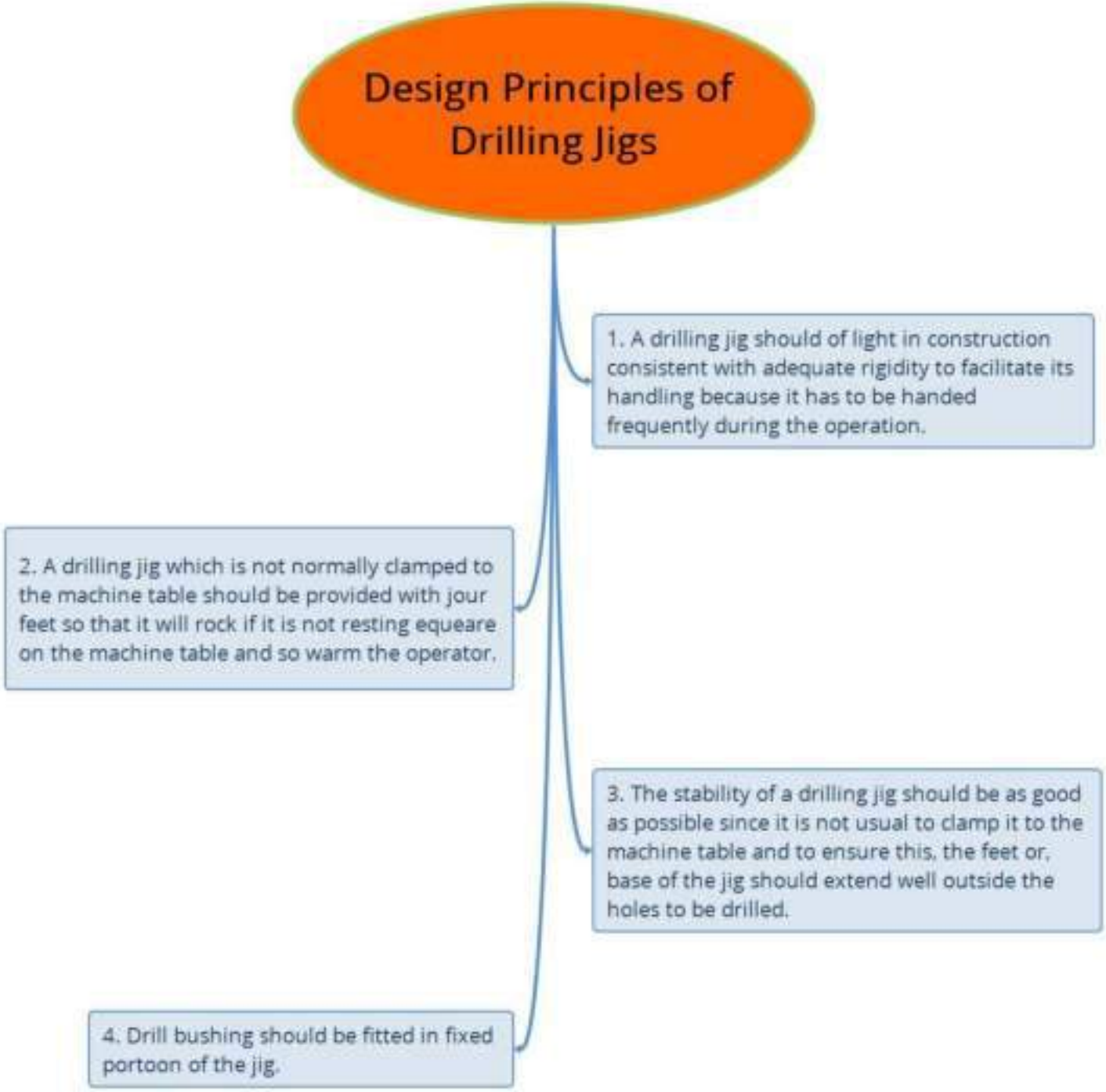

Drill Bushes:

Jig bushings eliminate the elastic spring back in machining and easily locate the tool relative to the work.