Foundation

Foundation:Foundation is the most important part of the building. Building activity starts with digging the ground for foundation and then building it. It is the lower most part of the building. It transfers the load of the building to the ground.

Its *main functions and requirements are:*

(a) Distribute the load from the structure to soil evenly and safely.
(b) To anchor the building to the ground so that under lateral loads building will not move.
(c) It prevents the building from overturning due to lateral forces.
(d) It gives level surface for the construction of super structure.

Bearing Capacity is the ability of a soil to support a load from foundation without causing a shear failure or excessive settlement.

Ultimate Bearing Capacity(UBC): It's the gross pressure at the base of foundation at which the soil fails in shear. It's not used for design because it has a big value.

Net Safe Bearing Capacity: Ultimate Bearing capacity devided by factor of safety.

Safe Bearing Capacity(SBC): Ultimate Bearing capacity devided by the factor of safety. The factor of safety varies between 2 and 5, depending upon the importance of the structure and the soil profile at the site. The factor of safety should be applied to the net ultimate bearing capacity and the surcharge pressure due to depth of the foundation should be added to get the safe bearing capacity.

SBC= (UBC/ factor of safety) + surcharge pressure due to depth of foundation

Criteria for determination of Bearing Capacity:

1) Shear failure of the foundation or bearing capacity failure, as it is sometimes called, shall not occur.
2) The probable settlements (differential as well as total) of the foundation must be limited to safe, acceptable values.
   The design value of the safe bearing capacity would be smaller of the two values, obtained from these two criteria,

Load bearing Structure	Framed structure
A load bearing masonry structure has load bearing walls which receive the load and transmit the same to the ground through their foundations	A framed structure has columns erected which in turn are braced together by beams and slab.
These load bearing walls supports the entire load including their self weight.	Space between column and beams are filled by panel walls.
Foundations for load bearing walls may be of two types: i) Simple strip footing ii) Strip footing with masonry offsets (Stepped footing).	Foundations for framed structures are of two types: ii) Isolated footing spread footing' slopped footing stepped footing iii) Pad footing simple pad footing stepped pad footing

Foundation

Suitable up to three floors	Suitable for any number of floors
Cost is less	Cost is more
Less space	More space
Not suitable for all types of soil	Suitable for any type of soil.

Advantages of framed construction:

- They are meant for multistoried buildings
- Framed structures provide greater floor area. The walls and partition walls which are thin resulting increase of floor area.
- Additions and alterations can be more easily done in the case of framed structures.
- Construction time is less in framed constructions
- They can resist earth quake shocks better than a load bearing structure.

Types of foundations:

Broadly Classified to two types:

1) Shallow foundation : Depth ≤ Breadth
2) Deep foundation : Depth > Breadth

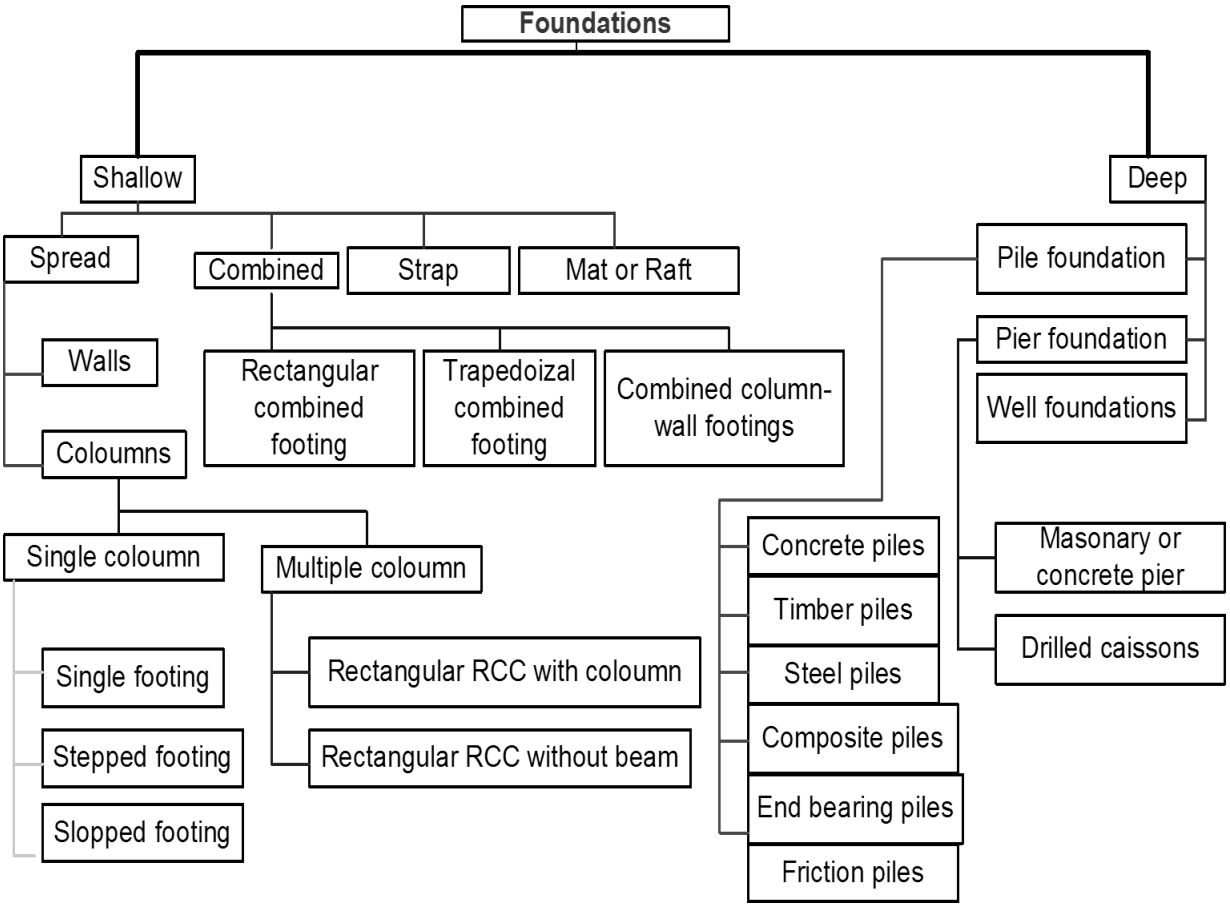

Foundation

Shallow foundation: Depth ≤ Breadth

1. **Spread footings**

It is the type of footing which supports either one wall or one column spread the superimposed load of wall or column over a large area.

Single column spread footings.

Single footing

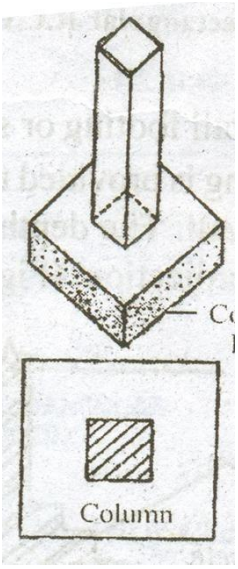

Stepped footing

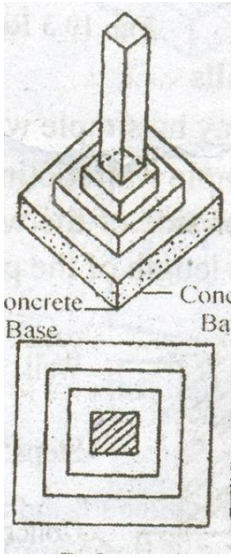

Slopped footing

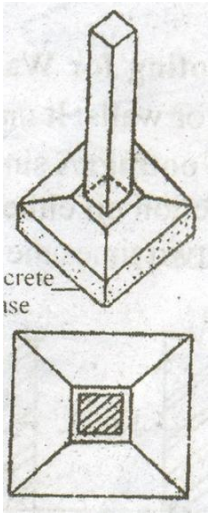

.ii Multiple column spread footings.

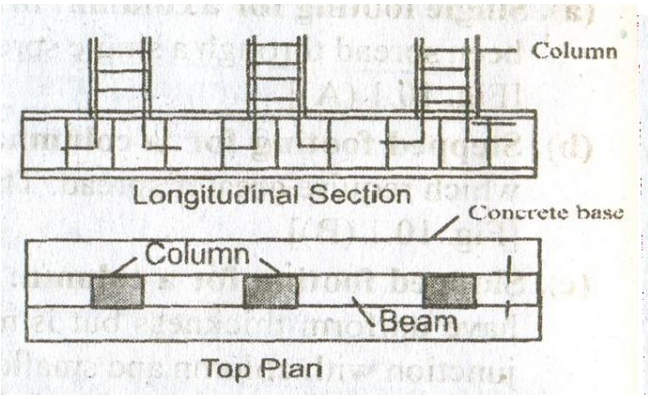

Rectangular RCC with column (with beam)

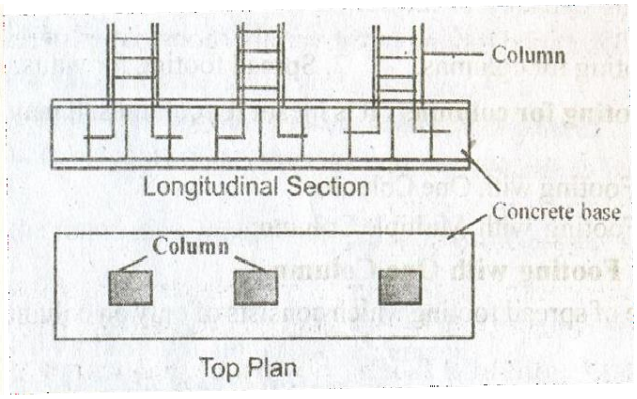

Rectangular RCC with column (without beam)

Foundation

.B Wall Spread footings

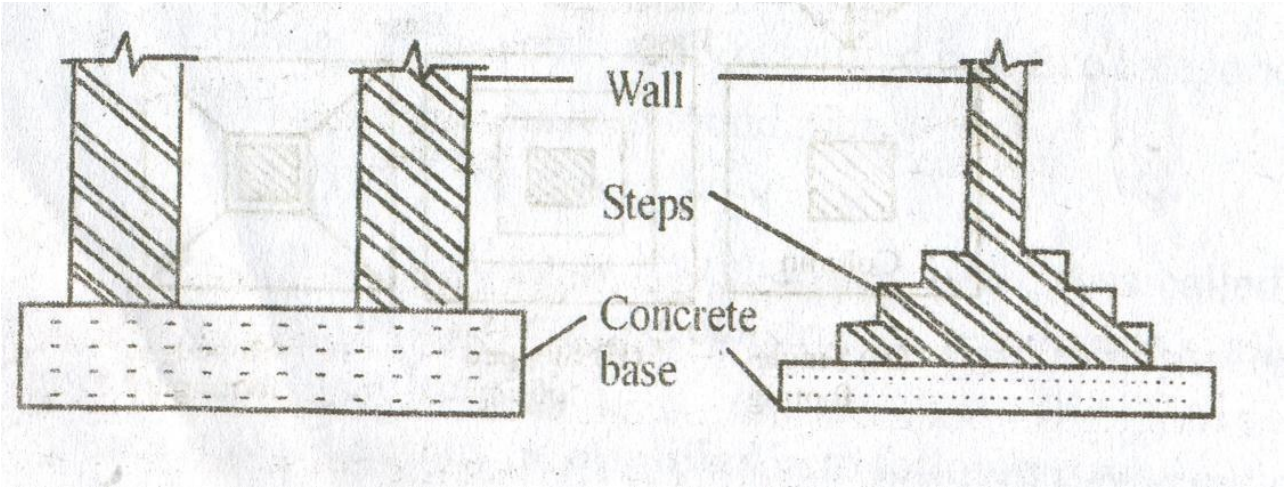

Combined footings

Common footings may be provided for two columns. This type of footing is necessary when a column is very close to the boundary of the property and hence there is no scope to project footing much beyond the column face

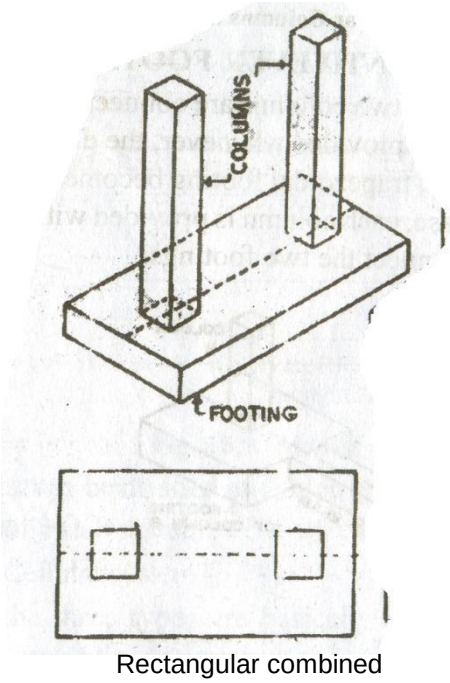

Rectangular combined footing

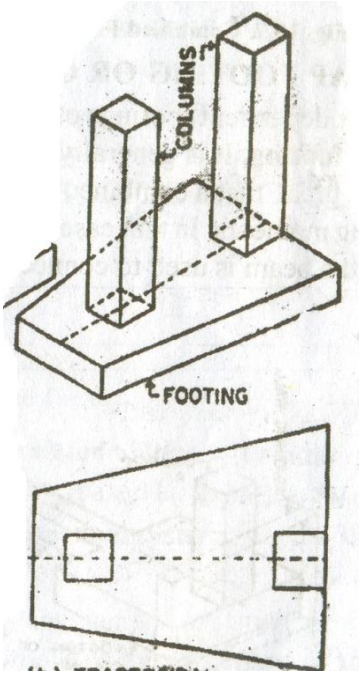

Trepezoidal combined footing

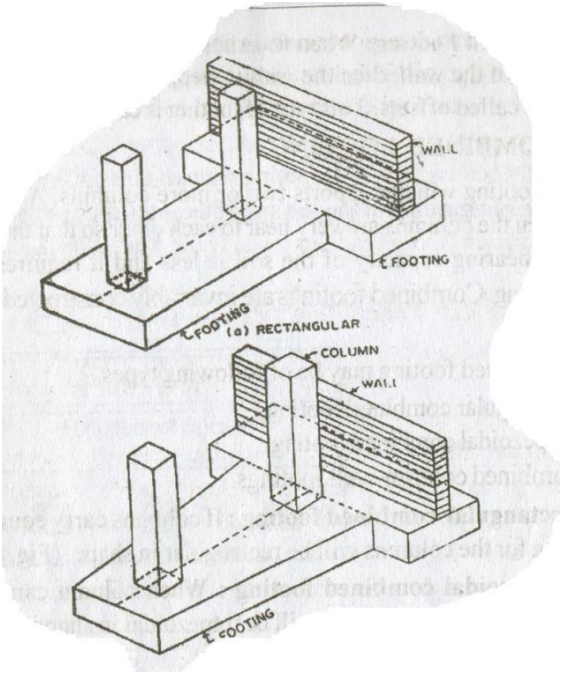

Combined column wall footing

Foundation

Strap (Cantilever) Footings

These are Independent footings connected by a beam and provided when the distance between the columns is large.

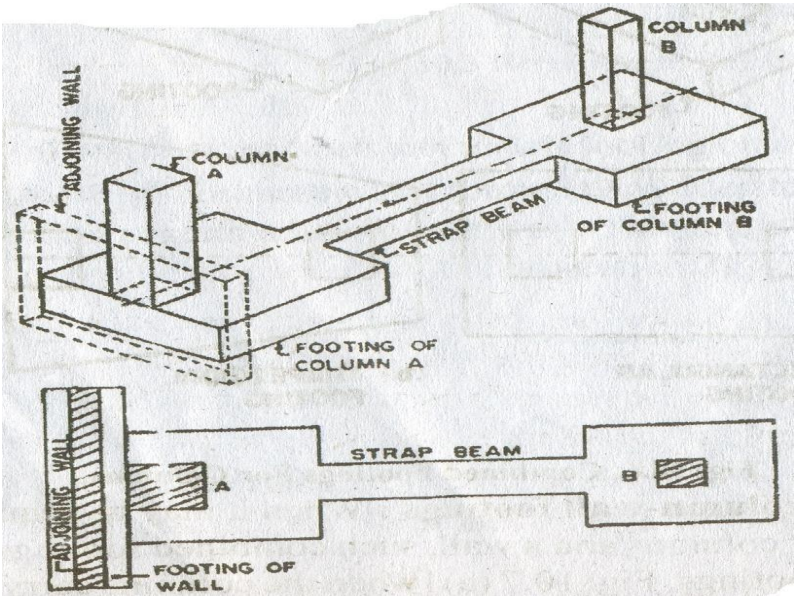

Mat/Raft/Grid Foundation

It is a combined footing that covers the entire area beneath a structure and supports all the walls and columns.

It is suitable when the load coming on the soil is practically uniform or soil is of yielding nature or where soil tends to cause differential settlement or spread footing would cover more than half the area of the foundation.

If the load on the column is quite high (Multistorey columns) or when the SBC of soil is low, the sizes of isolated columns may work out to be to such an extent that they overlap each other. In such situation a common footing may be provided to several columns

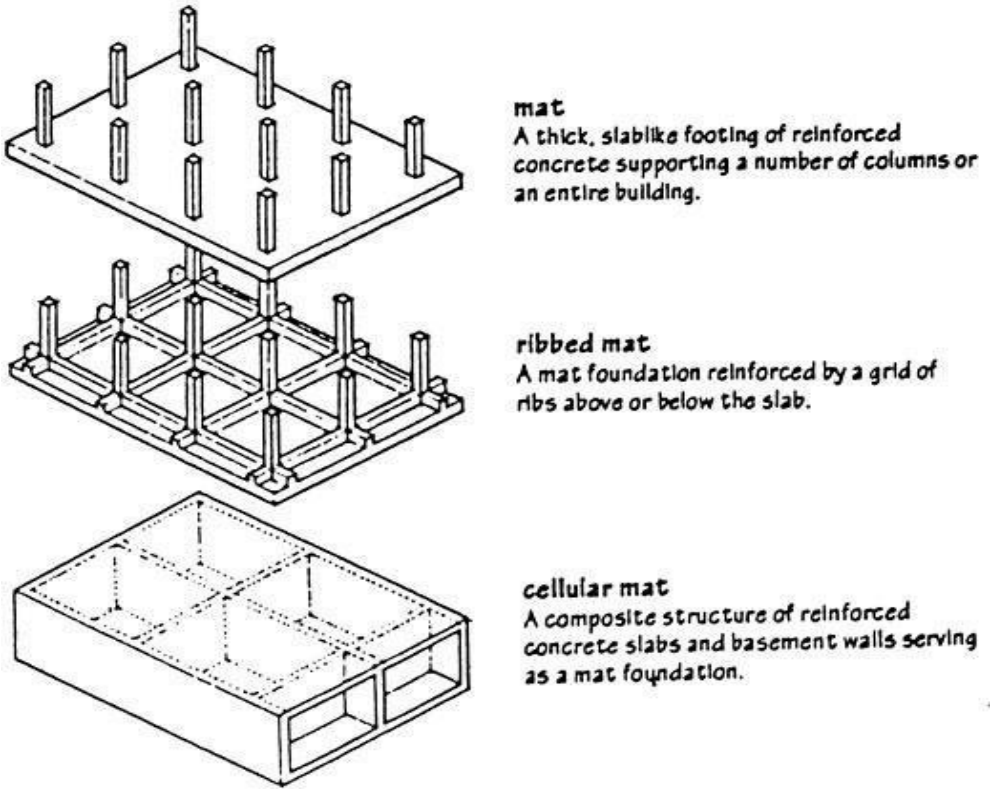

2.0 Deep Foundation : **Depth > Breadth**

2.1Pile foundation

These foundations are known as deep foundations

The pile transfer the load to soil by friction or by direct bearing, in the latter case, piles being taken up to hard strata.

This type of foundations is used when top soil is not capable of taking the load of the structure even at 3–4 m depth.

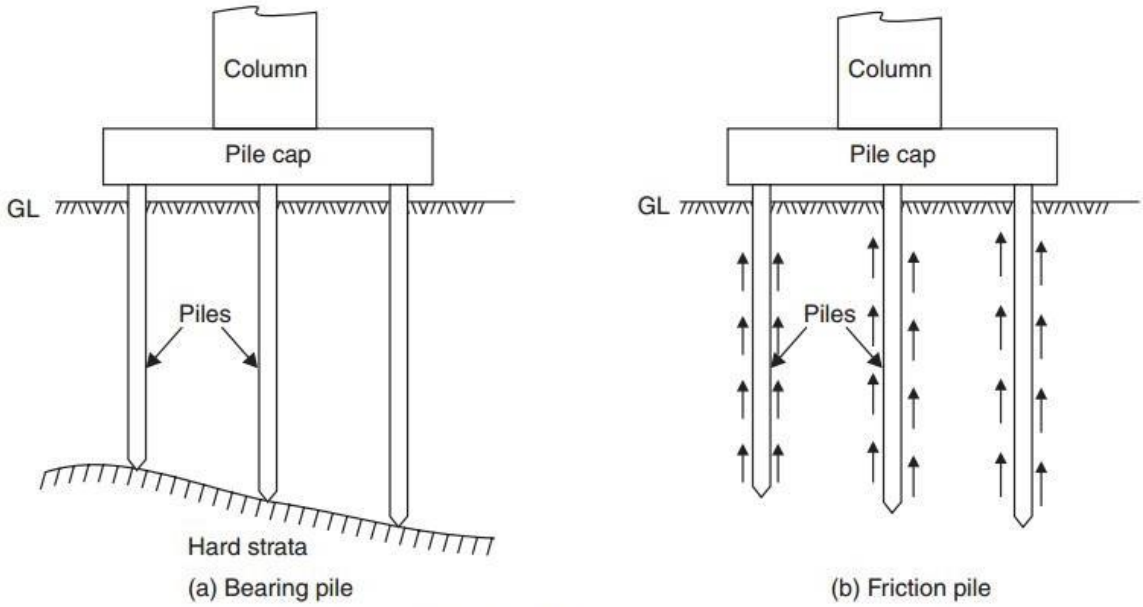

Fig. 7.9. Pile foundations

Classification of Piles According to Load Transfer:

According to the load transfer to the soil piles may be classified as

(a) Bearing piles and

(b) Friction piles.

<u>a)</u> <u>End Bearing piles</u>

End Bearing piles rest on hard strata and transfer the load by bearing. Such piles are preferred. These piles are used if the hard strata is available at reasonable depth.

<u>b)</u> <u>Friction piles</u>

Friction piles transfer the load to the soil by the friction between soil and the pile. Such piles are used if hard strata is not available to a considerable depth. The friction developed is to be properly assessed before deciding the length of the pile. The surface of such piles is made rough to increase the skin friction so that required length of pile is reduced.

Classification According to Materials Used:

Piles may be classified as:

(a) Timber piles

(b) Concrete piles

(c) Steel piles and

(d) Composite piles.

(a) Timber piles: Circular seasoned wood can be used as piles.

Their diameter may vary from 200 mm to 400 mm. The bottom of the pile is sharpened and is provided with iron shoe, so that it can be driven in the ground easily by hammering.

These piles are cheap and can be easily driven rapidly.

The main disadvantage is their load carrying capacity is low and are likely to be damaged during driving in the soil.

(b) Concrete piles: These piles may be further classified as precast piles and cast in situ piles.

Precast piles are reinforced with steel and are manufactured in factories. Square, circular and octagonal sections are commonly used. The length of piles may be up to 20 m.

They are provided with steel shoe at the lowest end.

These piles can carry fairly large loads.

The disadvantage of these piles is they need more time to manufacture and are heavy to handle.

Cast in situ concrete piles are formed first by boring the holes in the soil and then concreting them. Concreting is usually made using casing tubes. If the hole is filled with only plain concrete it is pressure pile. The load carrying capacity of the piles may be increased by providing enlarged base.

The reinforcement caging may be inserted in the bored holes and to increase load carrying capacity one or two under reams may be formed. After that concreting may be carried out. Such piles are known

as under reamed piles. These piles are provided at regular interval of 2 to 4 m and capping beam is provided over them.

(c) Steel Piles:A steel pile may be a rolled steel I sections, tubes or fabricated in the form of box.These piles are mostly used as bearing piles since surface available for friction is less and also the coefficient of friction is less. These piles are very useful for driving close to existing structures since they disturb the soil least.

(d) Composite Piles:Composite piles may be of concrete and timber or of concrete and steel.

Foundation

Pier Foundation

Pier foundations are somewhat similar to pile foundations but are typically larger in area than piles. An opening is drilled to the desired depth and concrete is poured to make a pier foundation.

a) Masonry Pier

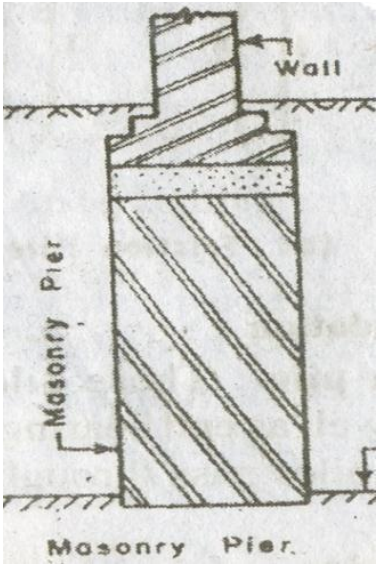

b) Caisson

A caisson is a structural box or chamber that is sunk into place or built in place by systematic excavation below the bottom. The top and bottom are open during installation for open caissons. The bottom may be finally sealed with concrete or may be anchored into rock.

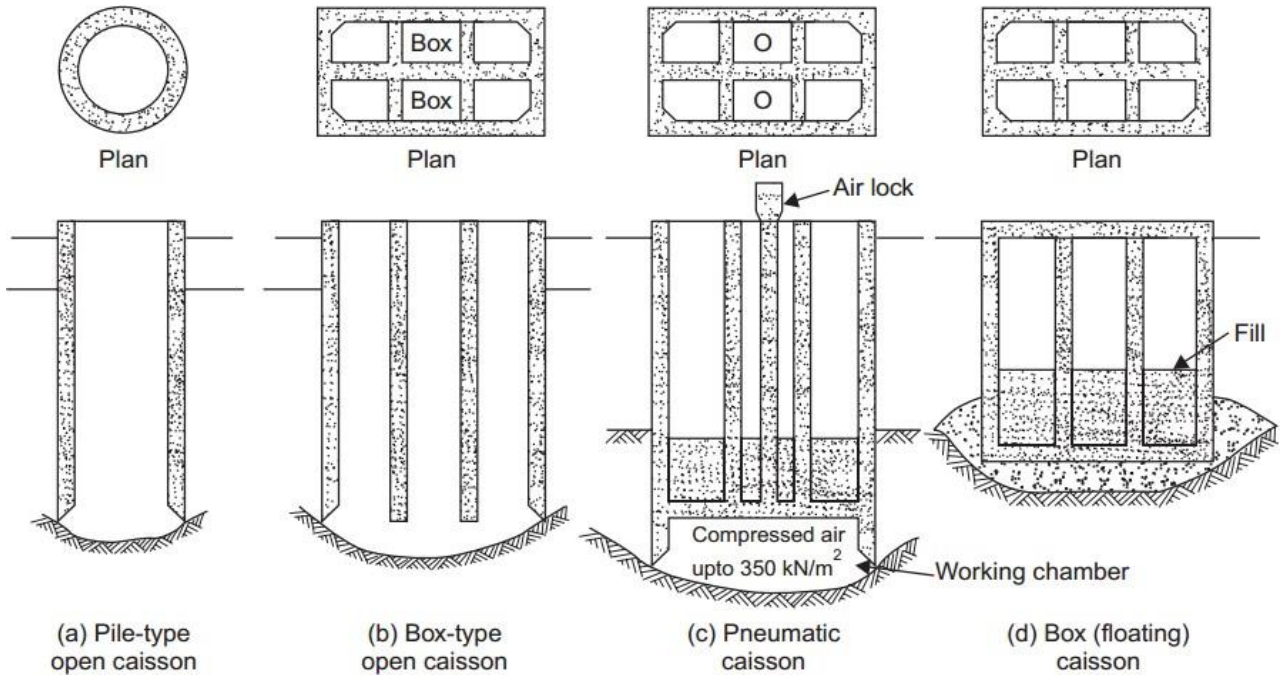

Foundation

Well foundation:

Box shaped structure. It can be rectangular or circular. It is sunk from surface to the desired depth.
Their diameter is large compared to pier foundation Well foundations are hollow from inside which should be filled with sand and plugged at the bottom. *Used for:* Bridge piers, Large water front structures, pump houses, Docks, Break water structures

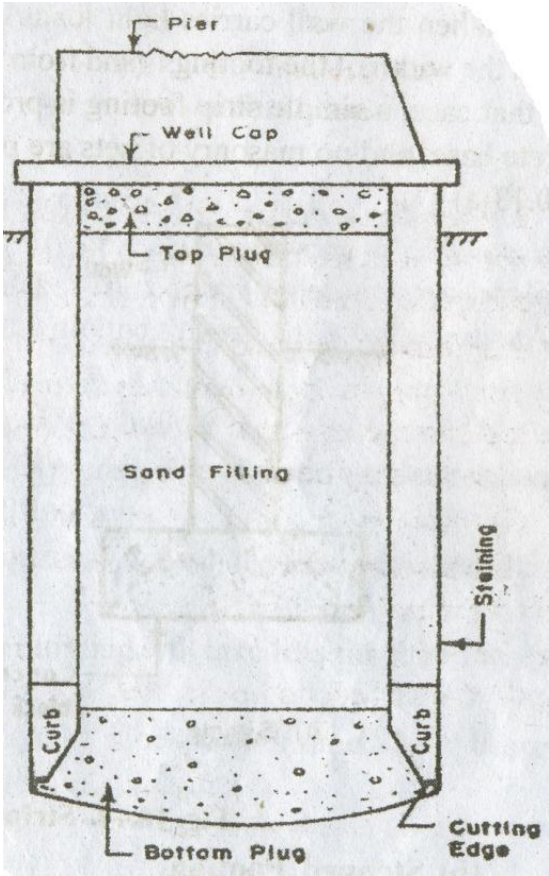

Foundation

Black Cotton Soil

Black cotton soil swells during rainy season and cracks in summer due to shrinkage.
These shrinkage cracks are 100 mm to 150 mm wide and 0.5 m to 2 m deep.
Swelling creates upwards pressure on the structure and shrinkage creates downward pull.
It results into cracks in foundations wall and roof. Hence foundation in black cotton soil need special care.

In case black cotton soil is only to a depth of 1.0 m and 2.0 m it is economical to remove entire black cotton soil from the site and build the foundation on red soil. Apart from this black cotton soil should be removed from the sides of the foundation and filled with sand and gravel.

In case the depth of black cotton soil is more, the following type of foundation may be provided:

1. Strip or pad foundation

2. Pier foundation with arches and

3. Under reamed pile foundation.

1. **Strip or Pad Foundation:** *Strip foundation are for walls while pad foundations are for columns*. In these foundation the attempt is to keep black cotton soil from foundation by interposing layers of sand and gravel. These foundations should be constructed during dry season.

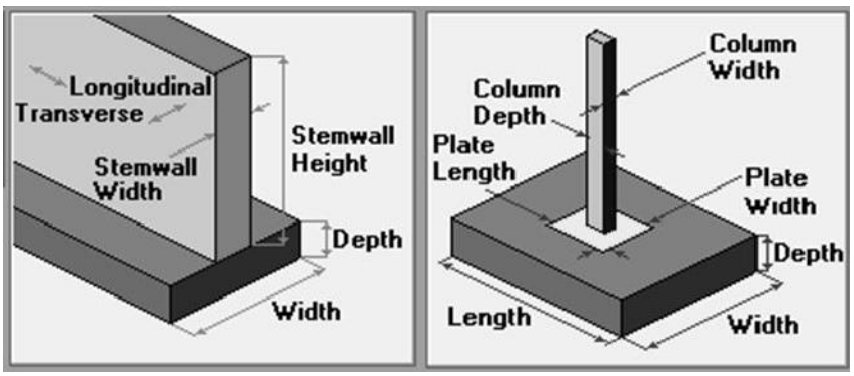

Strip foundation for walls | Pad foundation for Columns

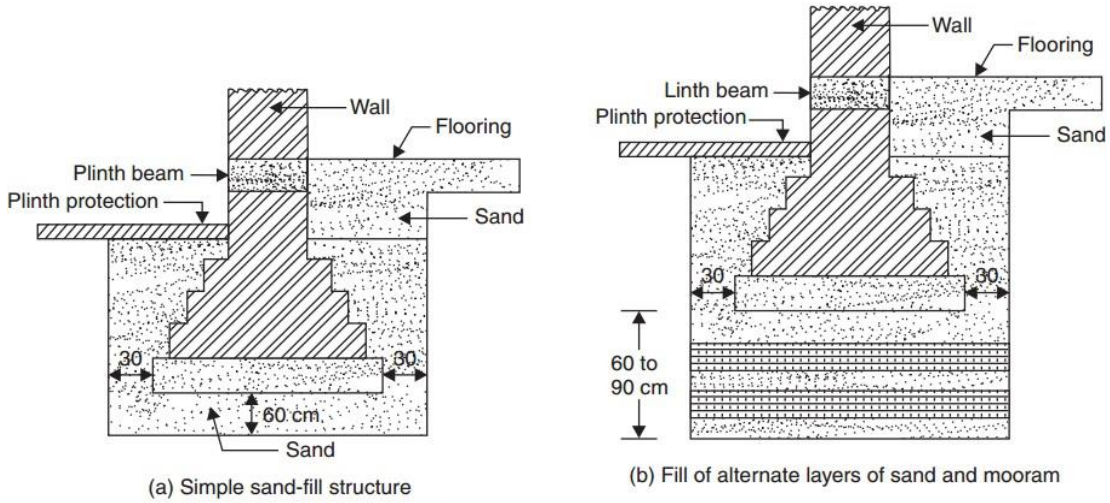

Fig. 7.11. Strip or Pad foundation

2. **Pier Foundation with Arches:**A pier is a vertical columns of relatively larger cross-section than piles. For walls carrying heavy loads, piers are dug at regular intervals and filled with plain concrete. Then the piers are connected by concrete or masonry arch. Over these arches regular masonry is built.

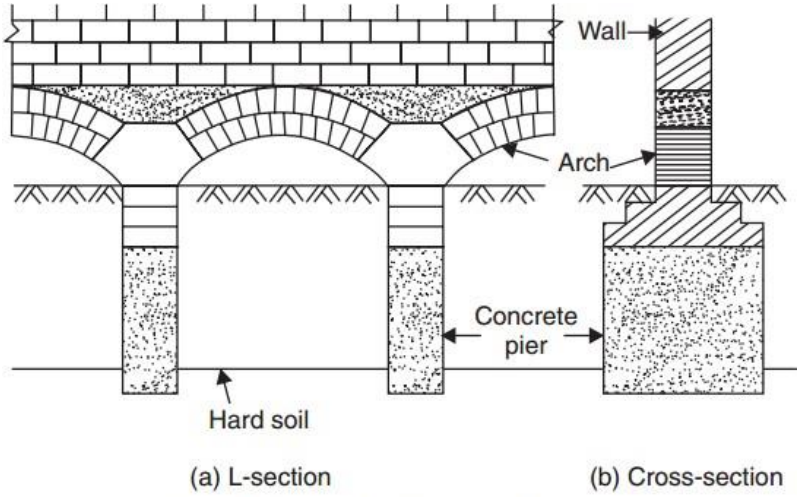

Fig. 7.12. Pier foundation with arches

3. **Under Reamed File Foundations**:Under reamed piles are bored and then concreted at the sites. Their length may vary from 3 to 6 m. They are provided with reams and reinforcement.
The pile spacing varies from 2 to 4 m. The top of piles are provided with capping beams over which walls are built.

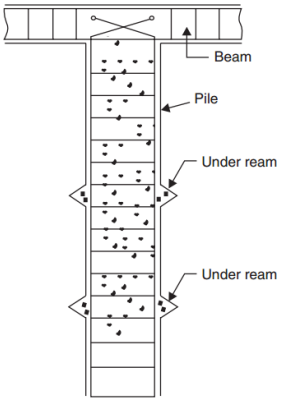

(b) Under-reamed pile

Soils for foundation

Moorum- Murum is a special type of coarse grained soil. It may be red, brown in colour and found in lumps and it can be well compacted deposits. When dry it can be broken if forced by both hands.
It has good bearing capacity and is suitable for most of the foundations. (Good Soil for foundation)

Silt- Inorganic silts are finely ground particles of sand. The silts may have either no plasticity or small plasticity under different amount of water content. Such soils when air dried have either very less or no strength. (Poor soil for foundation)

Rock: Generally any rock or boulder which requires blasting i.e. quartzite, granite, basalt etc.is termed as hard rock. It can not be removed by chiseling or any manual means but only can be excavated by mechanical means or blasting.They have high bearing capacity. (Good Soil for foundation)

Improving the bearing capacity of soil

If the soil at the site is found to incapable to sustain the load coming upon it, the bearing capacity of the soil can be improved by following methods-:

1) By deepening the foundation : This is the simplest method. The soil is more compact at greater depth.

2) By draining the site : This is the simplest method by providing suitable drains. Water find its way to the lower levels. The soil bed under the foundation can be drained by surrounding the building with a tile drain, which is laid at level lower than the foundation .

3) By ramming in dense material : It is possible to increase bearing capacity of a soil by spreading sand, gravel or broken stone over the foundation bed & ramming it into the soil, in this way a more compact zone is artificially produced .

4) By compacting soil -: Bearing capacity of soil can be increased by compacting the soil by bulldozers .